Heartland Corridor, Walton Virginia to Columbus Ohio

Preliminary Engineering Phase Report

Williamson Tunnel – MP N471.62 Williamson, WV

October 14, 2005, Rev. 2

Hatch Mott MacDonald

Hatch Mott MacDonald

Preliminary Engineering Phase Report

October 14, 2005

Norfolk Southern Railway
Heartland Corridor, Walton VA to Columbus OH

Williamson Tunnel – MP N471.62

Statistics: Pocahontas Division
Double-width Tunnel for Main #1 and Main #2
Length = 678'
Masonry – stone walls with brick crown
Degree of Curvature = 4.0 RT (per Track Chart)
Superelevation = 2.0" (per Track Chart)

1. EXISTING CONDITIONS 2

2. CLEARANCE IMPROVEMENT ALTERNATIVES 5

3. PREFERRED ALTERNATIVE 6

4. USGS TOPOGRAPHIC MAP 7

5. AERIAL PHOTO 8

6. TRACK CHART 9

7. PHOTOS 10

8. ESTIMATE 13

9. DRAWINGS 15

Tunnel Clearance Cross Sections

Plan and Profile

Valuation Map

1. EXISTING CONDITIONS

1.1 Background

Valuation map V-17-WV/2 (16510) for the Williamson Tunnel, also known as the Mingo Tunnel, is dated June 30, 1916. Parcels for the tunnel were acquired in 1891 and 1903; construction of the tunnel was complete in 1906. A Norfolk Southern tunnel inspection sheet for the Williamson Tunnel references Drawing No. Y-1617-A (3 sheets) dated February 23, 1982, which documents portal and liner repairs made to this tunnel. The liner repairs included masonry pointing and shotcrete repairs to the stone walls and brick crown, over less than 10% of the tunnel. Additional information on this tunnel was obtained from various sources such as topographic maps, aerial photos, inspection reports, track charts, and field investigations that were performed on April 1, June 15, and August 3, 2005.

1.2 General Area

The tunnel is located in a populated area with a park and college located on the east side and a residential area on the west side. Access is readily available via local roads. A bridge carrying US Rt. 52 over the railroad is located immediately outside the east portal. The floodwall for the Tug River is also located outside the east portal. The tunnel is outside of the area protected by the floodwall. Records show an extreme high water elevation of 662.60 on March 12, 1963. For reference, the top of low rail of Main #2 at the east portal has an elevation of 656.5.

1.3 Structural Conditions

The tunnel is 678’ long with a stone wall and brick crown and a nominal width of 30’. It is a double width tunnel for two tracks. There is some slight deterioration of the brick crown with the worst case being near the west portal. The tunnel is in generally good shape. Water leaking from the crown is confined to within 30’-40’ of the portals.

A small portion of the tunnel invert material was excavated to fully expose the base of the tunnel liner footing. The footing thickness was found to be 14”. The vertical distance from the top of rail to the base of the footing was measured at 26”.

Liner cores were taken on August 3, 2005. Cores were drilled into the liner at locations 200’, and 478’ into the tunnel from the east portal. The cores were taken at the 5, 2 and 12 o’clock positions at each location. A borescope was inserted into the holes to view inside the liner. The video from the borescope was recorded onto a DVD. The liner probe investigation is summarized in the table below:

Summary of Williamson Tunnel Liner Core Investigation			
Distance from East Portal (feet)	**Position**	**Liner Thickness**	**Notes**
200	5 o'clock	18"	7” of concrete, followed by 11” sandstone block wall.
200	2 o'clock	33"	Red brick, sandstone immediately behind liner, no void.
200	12 o'clock	30"	6” concrete followed by 24” of red brick, no void behind liner.
478	5 o'clock	37”	37” sandstone block wall, no void.
478	2 o'clock	29"	Red brick, no void.
478	12 o'clock	28"	28” red brick, void behind liner, video taken

A sample of the brick crown core from 200’ in from the east portal at the 2:00 o’clock position had a compressive strength of 1,686 psi. A sample of concrete from the wall from 200’ in from the east portal at the 5:00 o’clock position had a compressive strength of 3,703 psi.

1.4 Track

The track is of conventional design with wooden crossties and a stone ballast section. The ballast is low in some areas with mud pumping through occasionally. The rail is continuously welded 136 RE with a tie spacing of 20”. The track is curved to the right 4.0 degrees for the entire tunnel. A drainage swale is located along the north wall exposing the footing. Standing water is evident in the swale. The water in the tunnel was tested and its pH reading was 7.64. This is a fairly neutral reading and indicates that the water is not unusually corrosive. The ballast from this tunnel was tested and classified as being “Very Strong”, requiring many blows of a geological hammer to break intact rock specimens.

1.5 Geotechnical

The tunnels in the west-central part of the Pocahontas Division (Hatfield, Williamson, Big Sandy 1-4, and 7) are located in the Appalachian Plateaus Physiographic Province, a region characterized by deeply incised plateaus underlain by flat-lying sedimentary rock. The Williamson Tunnel itself is lined and no rock was exposed. The description of the site geology at the tunnel is based on our observations of the rockmass at the portals and adjacent cuts and the 1968 *West Virginia Geologic Map* prepared by the West Virginia Geologic and Economic Survey.

The tunnel is excavated through the Kanawha Formation, a medium- to thick-bedded fine- to medium-grained sandstone, with interbeds of shale, siltstone, and coal. Bedding in the Kanawah

Formation is subhorizontal and gently rolls back and forth towards the northwest and southeast. Joints in the rock cuts of the formation are typically steeply dipping and widely spaced. Most joints are less than 15 feet in length and are not through-going across the exposure face.

The rock quality designation, Q, at the portals was determined to be 23. A Q rating between 10 and 40 is considered "Good" with 10 bordering on "Fair" and 40 bordering on "Very Good." A sample of rock was obtained from the tunnel portal on June 15, 2005. Lab testing of the sample indicates that the rock is sandstone and has a compressive strength of 10,099 psi.

The geoprobes indicate that the top of rock is located between 1.5' to 3.7' (averaging about 2.5') below the top of ballast for Main #1 and between 1.5' to 3.8' (averaging about 2.5') below the top of ballast for Main #2. Top of ballast is typically about 0.8' below top of low rail.

1.6 Clearances

The laser car measurements indicate that the existing tunnel has adequate horizontal clearance except for the "High-Wide Load" portion of the template on Main #1 for the first 50' from the east portal. The cross section shows the "High-Wide Load" encroaching the left wall by 6". For vertical clearance, the "Double Stack" portion of the envelope encroaches on the left side of the tunnel crown by 5" to 29" with the worst encroachment being at the east portal. The middle two-thirds of the tunnel has encroachments on the left side of the crown of between 4" and 10". On the right side of the tunnel crown, the "Double Stack" portion of the envelope encroaches consistently for the whole tunnel by 17" to 21", averaging about 20".

The clearance templates show that the "High-Wide" portion of the envelope encroaches the left side of the tunnel liner (at points lower than the Double Stack portion) by up to 21" at the east portal and in the first 150' of the tunnel, and then not at all for the rest of the tunnel. The "High-Wide" portion of the template encroaches on the right part of the tunnel crown consistently for the whole tunnel by 8" to 12", averaging about 10". Cross sections of the tunnel clearance encroachments are shown in the drawings at the end of this report. The maximum encroachments are summarized in the table below:

Distance (ft) from East Portal	Crown Encroachment (radial inches)	
	Left Side	Right Side
0	29	17
101	11	21
202	6	19
302	5	16
403	7	17
502	7	18
601	10	18
651	13	19

2. CLEARANCE IMPROVEMENT ALTERNATIVES

Given the magnitude of the vertical clearance deficiency, there are several general alternatives that can be used to obtain the clearance; liner replacement, notching the lining, using steel ties to lower the track, or constructing a new single-track tunnel. Combinations of the general methods may be required to obtain a design that is cost effective and that can be constructed within reasonable track outages. Track lowering by excavating or undercutting does not appear feasible due to the proximity of the top of rock to the surface.

2.1 Steel Ties

Substitution of steel ties for the standard wood ties would permit the rails to be lowered about 6 inches. Transition sections would be constructed at the tunnel approaches for the vertical curves and for a gradual transition in track stiffness. A proper drainage system is required to minimize corrosion of the ties.

Steel ties would not be sufficient to fix the entire clearance deficiencies, but in some cases could be used in conjunction with notching to provide a more economical solution. However, in this case, even with steel ties the amount of encroachment of the tunnel crown would still be significant enough to require deep notching throughout the tunnel. Also, lateral shifting of the track is a concern when using steel ties. Steel ties do not provide significant enough advantages that would warrant their expense. Therefore, they will no longer be considered as a viable alternative.

2.2 Notching the Crown

Notching of the brick and stone may be possible to gain minor amounts of clearance, on the order of one brick course or less. Two courses of the brick crown could be removed and shotcrete with mesh placed over the remaining brick. Notching of the stone-crowned areas near the portals will prove more difficult. While feasible, this method would not provide enough additional clearance and will not be consider any further.

2.3 Liner Replacement

To obtain the desired clearance, the tunnel crown must be demolished, the native rock excavated to the clearance limits plus the new liner thickness, and a new concrete liner installed. This method appears to be necessary for the entire length of the tunnel.

2.4 New Tunnel

Construction of a new single track tunnel would allow the removal of one track in the existing tunnel and a realignment of the remaining track, thereby providing two tracks with the desired clearances. A new tunnel could be constructed south of the existing tunnel. Such a tunnel would likely be of a similar length as the existing tunnel and would require acquisition of some property. A new bridge for Rt. 52 over the railroad at the east portal would be necessary. Constructing a new tunnel to the north of the existing tunnel is also feasible, but such an

alignment may require a longer tunnel. This alternative has the advantage of reducing track outages during construction and would provide for achieving the complete design clearance template.

3. PREFERRED ALTERNATIVE

Given the magnitude of the vertical encroachment, liner replacement of the tunnel crown is necessary to achieve the required clearance in the tunnel. Drainage improvements are also recommended.

3.1 Preliminary Design

The preliminary design uses replacement of the liner crown. The existing track structure is planned to be flooded with ballast to the top of the rail to provide access into the tunnel for the contractor to work and to protect the track during the construction. Minor realignment of the track will be achieved through the undercutting and track surfacing operations to alleviate minor horizontal encroachment at the east portal. The preliminary design also proposes to install a new drainage system and undercut the track to replace the fouled ballast.

3.2 Schedule

The estimated schedule for completing improvements on this tunnel is twenty-six (26) weeks including mobilization and demobilization. The schedule assumes one track being closed at a time, for ten hours, five days a week. The schedule assumes 12' of crown removal each day on one side of the tunnel, with liner removal, rock removal, installation of rock dowels and installation of shotcrete all occurring on the same day for each 12' segment. Drainage improvement operations would be undertaken at the same time as the crown removal, but at different locations in the tunnel.

3.3 Estimate

The total estimated cost for achieving clearance at this location is $5.0 million (2005 rates) or $7,323 per foot of tunnel. The work items include mobilization, surveying, liner removal, rock removal, rock dowels, crown installation, rock cut for drainage trench, tunnel drainage system, ballast cleaning, and demobilization. The total cost is made up of tunnel, track, signal, and site work items at $3.1 million, plus a 30% construction contingency, a 10% engineering allowance, and a 14% construction management allowance.

4. USGS TOPOGRAPHIC MAP

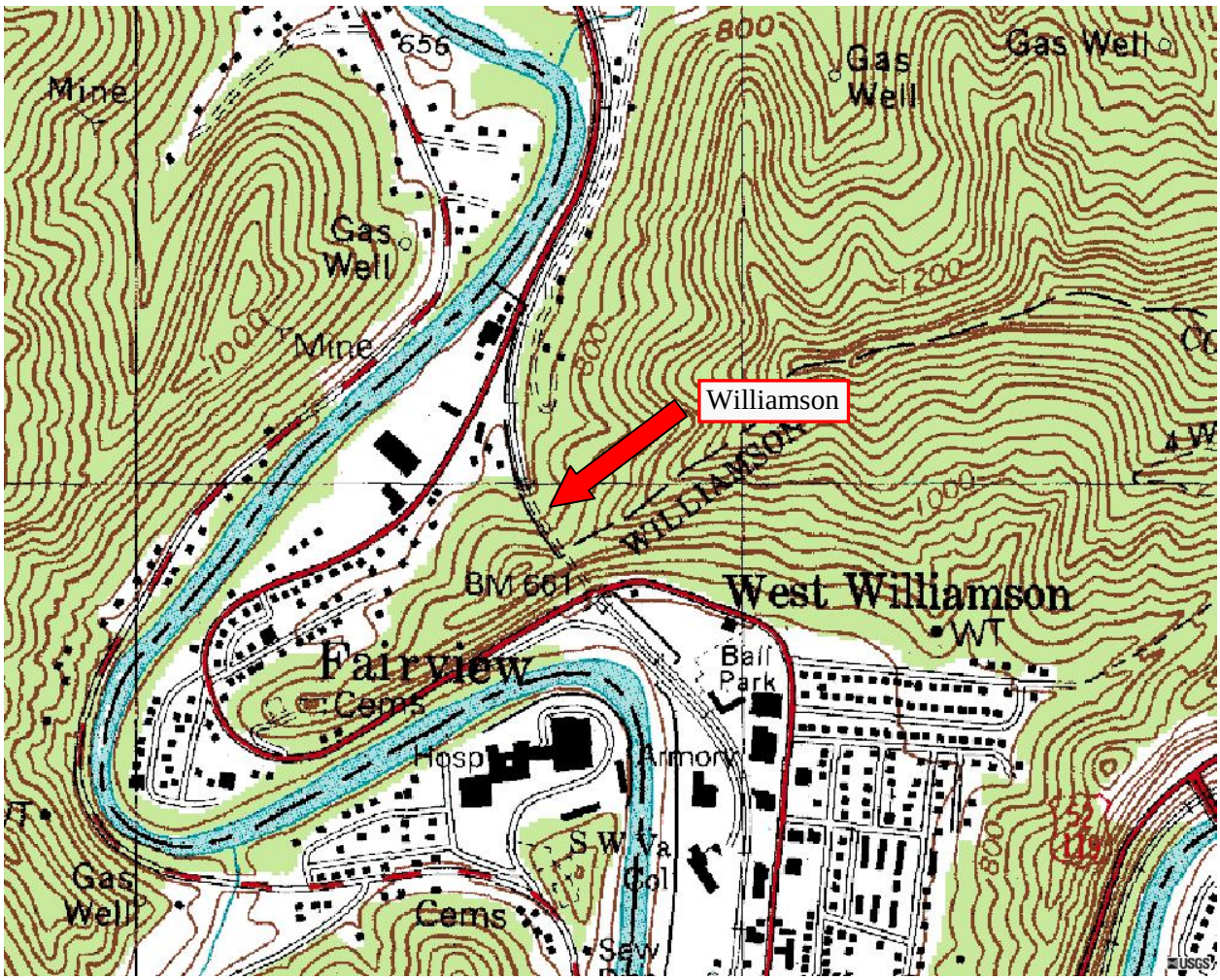

5. AERIAL PHOTO

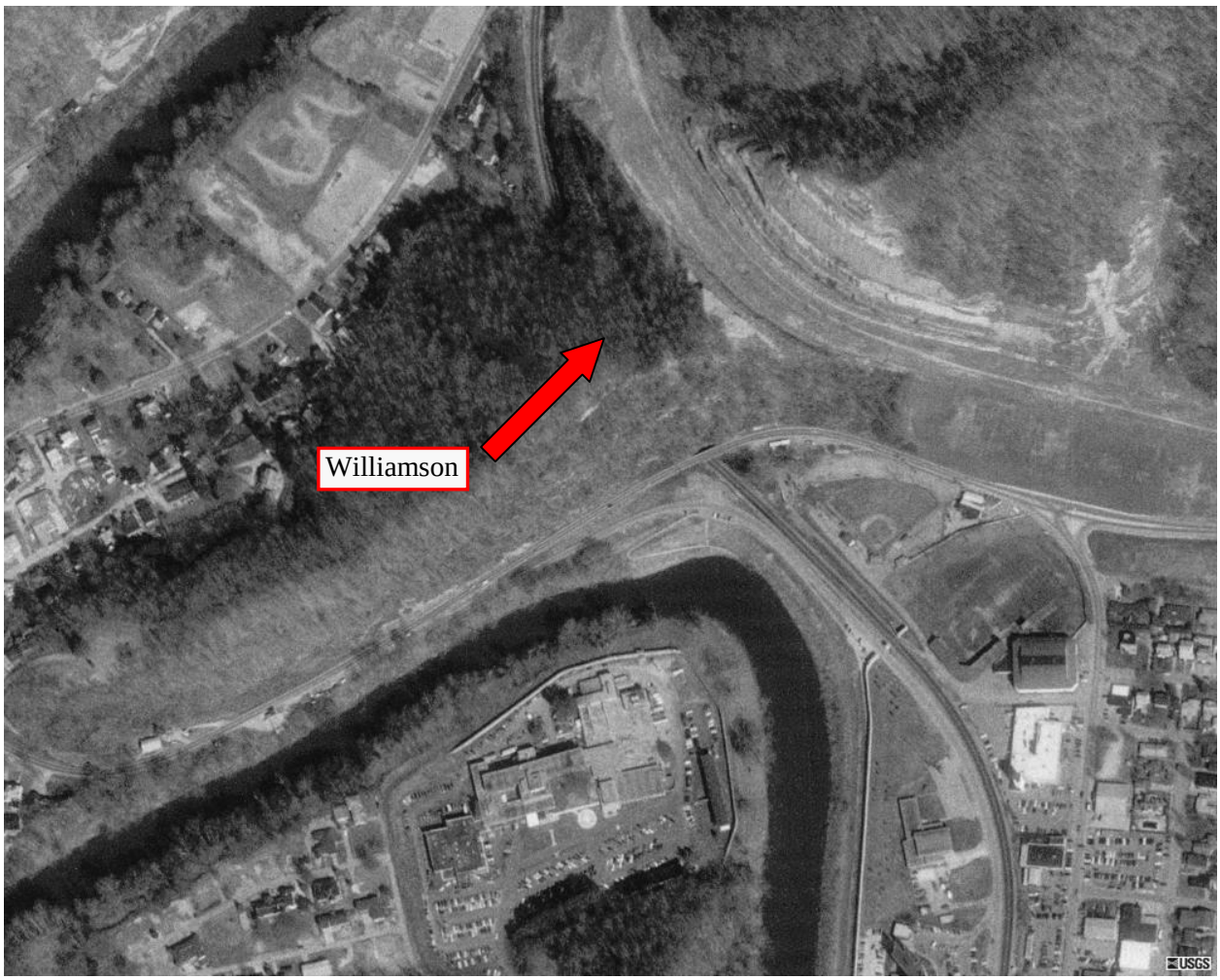

6. TRACK CHART

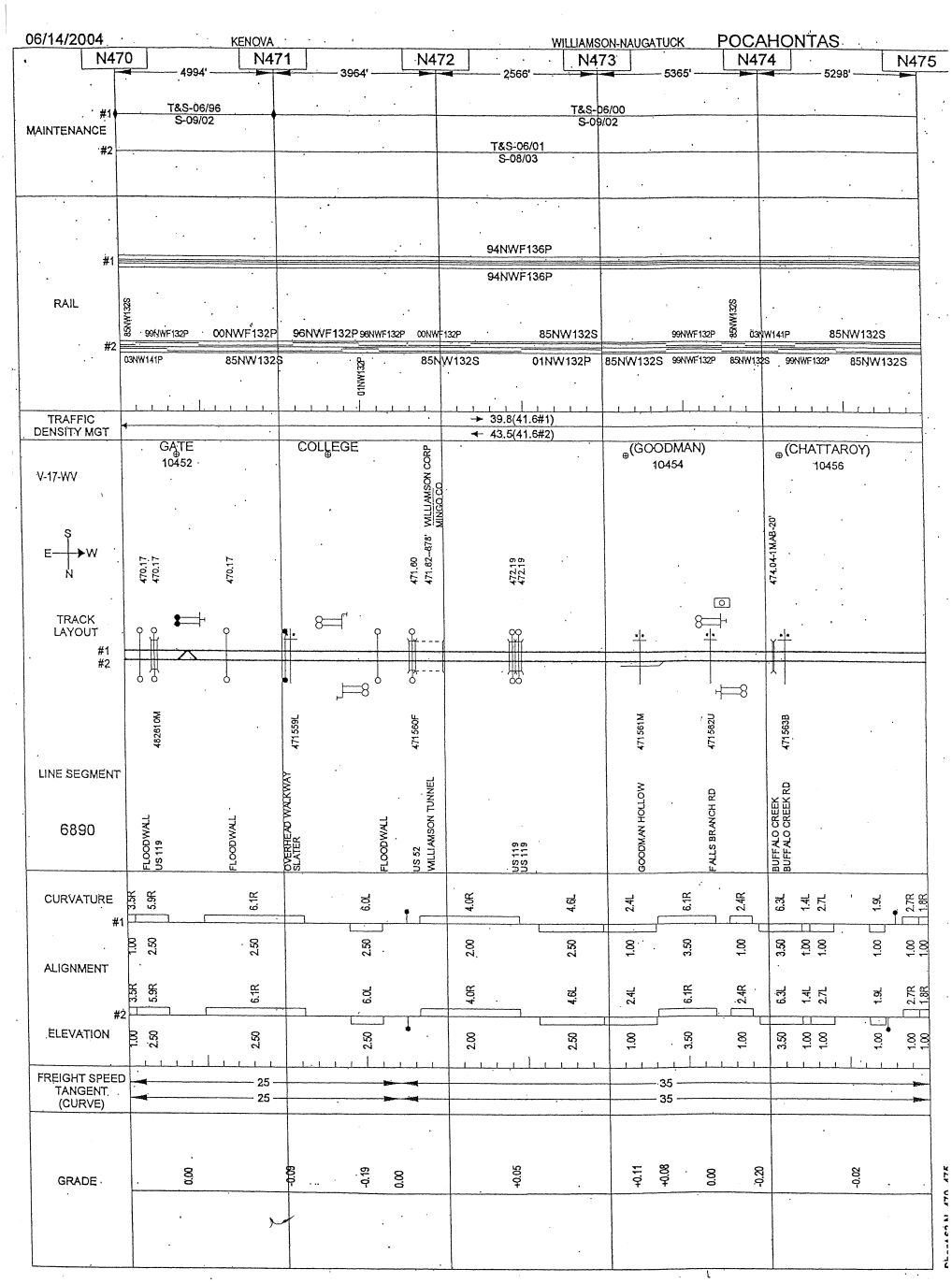

7. PHOTOS

Photo 1. East Portal

Photo 2. View from East Portal

Photo 3. West Portal

Photo 4. View from West Portal

Photo 5. Brick liner Showing Slight Deterioration at West Portal- Worst Case

Photo 6. Drainage Channel and Exposed Footer South Wall at East Portal

8. ESTIMATE

Williamson

Tunnel Length	678	ft
Tunnel Width	29.5	ft
# of Tracks	2	

	Contractor		Railroad	
Work Window	10	hrs	10	hrs
Setup & Demobilization Allowance	2	hrs	2	hrs
Production Time	8	hrs	8	hrs

Tunnel Work Items	UOM	Quantity	Unit Rate	Total
Mobilization	%	5%		$129,927.23
Surveying	DY	5	$1,300.00	$6,500.00
Minor Notching	LF			
Deep Notching	LF			
Rock Dowels 14' with Chain Link Mesh - Crown	EA	1130	$600.64	$678,723.20
Rock Dowels 14' with Chain Link Mesh - Wall	EA			
Rock Dowels 16'	EA			
Crown Removal	SF	31950	$16.22	$518,289.60
Wall Hydrodemolition	SF			
Wall Removal	SF			
Rock Removal - Crown	CY	1183	$428.36	$506,889.60
Rock Removal - Wall	CY			
Crown Installation	SF	31950	$24.46	$781,656.24
Wall Installation	SF			
Under Pinning	LF			
Rock Cut Drainage Trench	LF	878	$86.25	$75,729.60
Tunnel Drainage	LF	878	$16.33	$14,340.31
Demobilization	DY	5	$3,283.20	$16,416.00
Total Tunnel Work Items	**LF**	**678**	**$4,024.29**	**$2,728,471.78**

Trackwork Items	UOM	Quantity	Unit Rate	Total
Mobilization	DY			
Undercutting	PF	1356	$19.20	$26,029.72
Surfacing & Lining	PF	4068	$2.53	$10,304.06
Ballasting Track	TN	1356	$39.23	$53,191.32
Demobilization	DY			
Total Trackwork Items				**$89,525.10**

Signal Items	UOM	Quantity	Unit Rate	Total
Mobilization	DY			
Relocate Cables / Track Leads	LF	678	$13.33	$9,035.18
Cut-in	EA			
New CP	EA			
Modify CP	EA			
Grade Crossing - Single to Double Track	EA			
Signal Location Modification	EA			
New Cut Section	EA			
Demobilization	DY			
Total Signal Items				**$9,035.18**

Site Items	UOM	Quantity	Unit Rate	Total
Mobilization	DY	1	$2,483.60	$2,483.60
Erosion & Sedimentation Control	EA	1	$11,958.80	$11,958.80
Site Grading	CY			
Rock Excavation	CY			
Sub-Ballast	CY			
Drainage	LF			
Demobilization	DY			
Total Site Items				**$14,442.40**

Special Items	UOM	Quantity	Unit Rate	Total
Mobilization	DY			
Flagging	DY	128	$821.50	$105,152.00
Flood Track with Ballast for Protection	TN	2712	$40.13	$108,846.06
Remove Flooded Ballast	TN	2712	$9.02	$24,474.46
Temporary Bridges	EA			
New Railroad Bridges	EA			
New Highway Bridges	EA			
Invert/Crown Void Grouting	DY			
Demobilization	DY			
Total Specialty Items				**$238,472.51**

Subtotal All Items		**$3,079,946.98**
Construction Contingency	**30%**	**$923,984.09**
Engineering Allowance	**10%**	**$400,393.11**
Construction Management Allowance	**14%**	**$560,550.35**
Total		**$4,964,874.53**

9. DRAWINGS

9. DRAWINGS

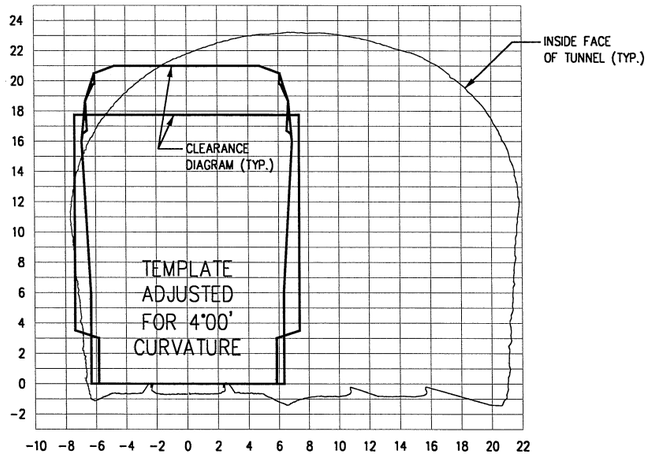

0+00

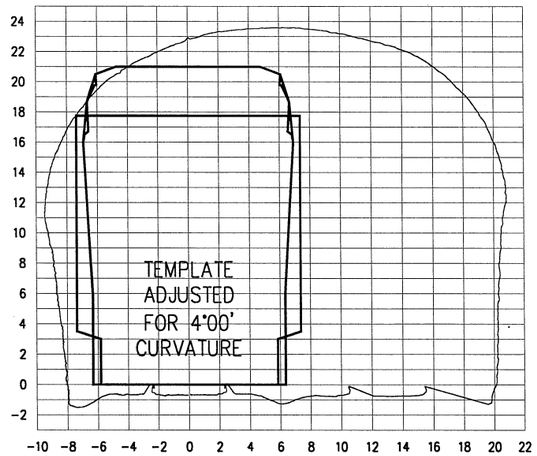

1+50

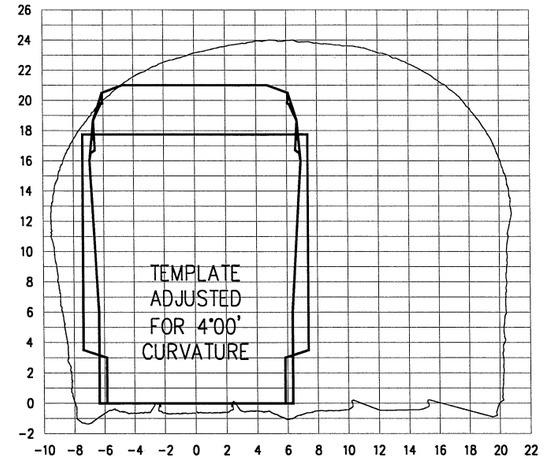

3+02

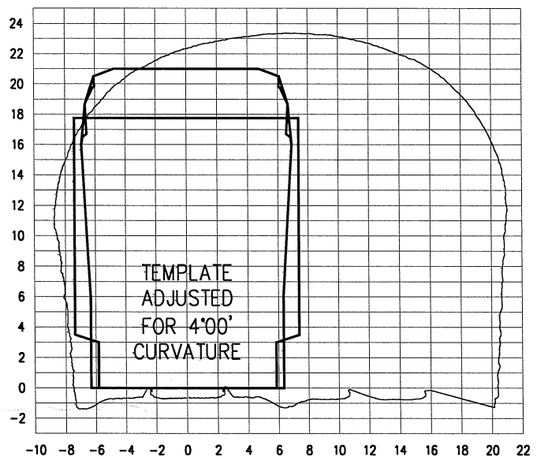

0+51

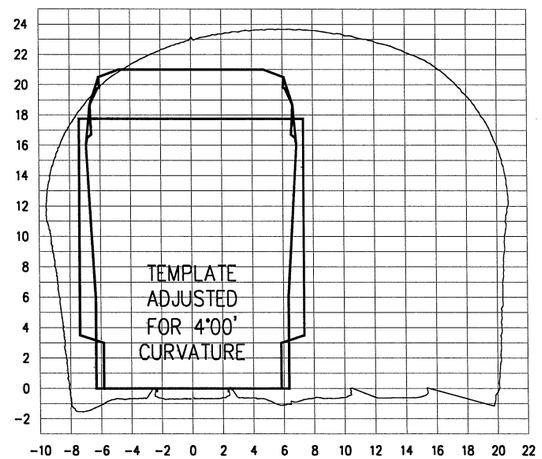

2+02

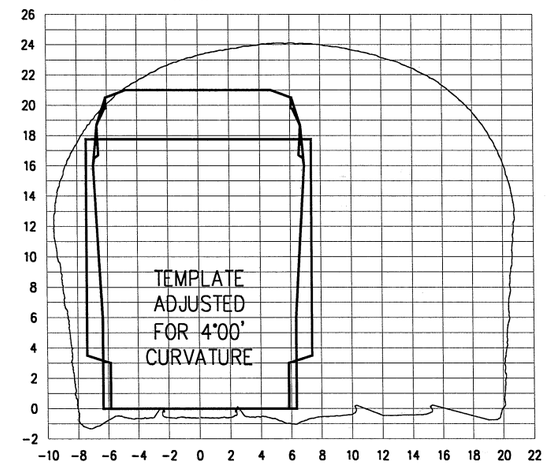

3+51

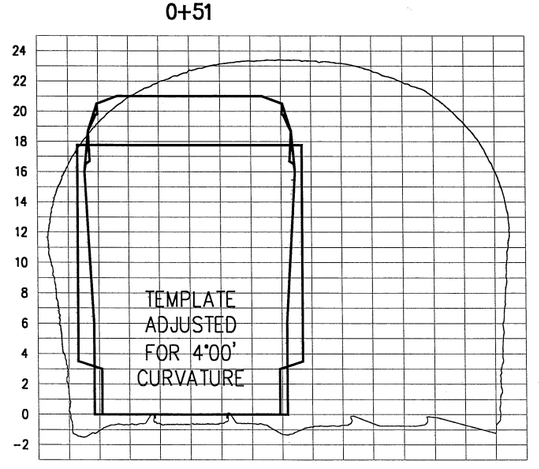

1+01

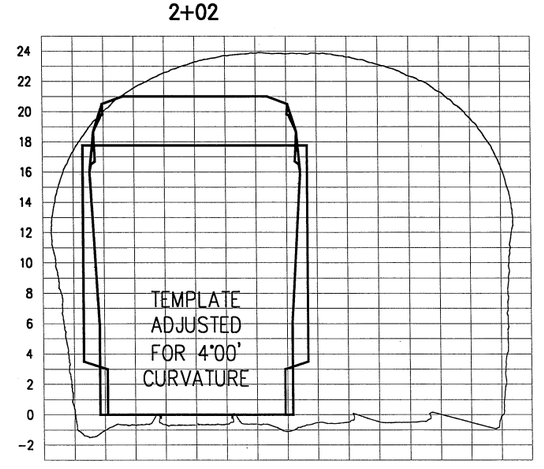

2+50

NOTES:

1. HORIZONTAL DATUM IS PARALLEL TO TRACK. WHERE TRACK IS SUPERELEVATED, DATUM IS NOT PARALLEL WITH GROUND.
2. CROSS SECTION GIVEN FOR STA. 0+00 IS A COMPOSITE FOR THE TUNNEL FROM STA. 0+00 THROUGH 0+50. ALL OF THE SECTIONS FOLLOW THIS CONVENTION.

NOT FOR CONSTRUCTION

SCALE: 1"=100'

50 0 100 200 300

Hatch Mott MacDonald

NORFOLK SOUTHERN

OWNING COMPANY
POCAHONTAS
OPERATING DIVISION
OFFICE OF THE CHIEF ENGINEER - DESIGN AND CONSTRUCTION - ATLANTA, GA.

REV	BY	DATE	DESCRIPTION
P1	DJL	8/5/05	PRELIMINARY ENGINEERING PHASE REPORT

LOCATION: WILLIAMSON TUNNEL, WILLIAMSON, WV

TITLE: TUNNEL CLEARANCE CROSS SECTIONS MAIN #1 – 1 OF 4

DGN	PID No.	VRN	16510	MILE POST N-471.62
DWN	FILE No.			DRAWING NUMBER
CHK	DATE APRIL 29, 2005			

FILE NAME = p:\NSR\29399\CAD\LASER CAR INFO\471.62 williamson_maint.dgn
DATE/TIME = 08/11/2005 11:36:17 AM

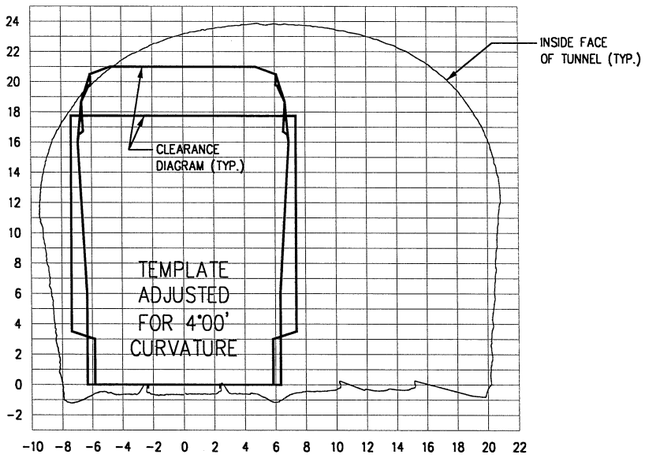

4+03

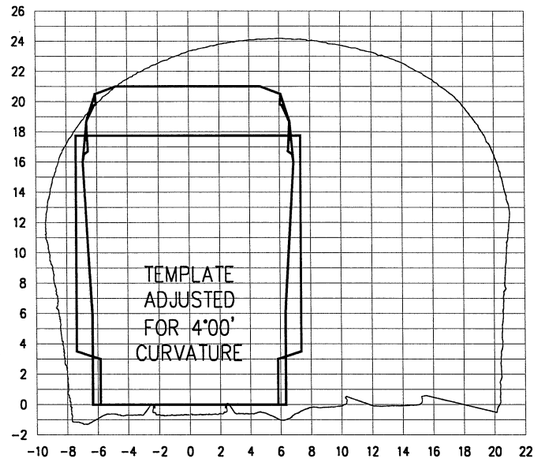

5+51

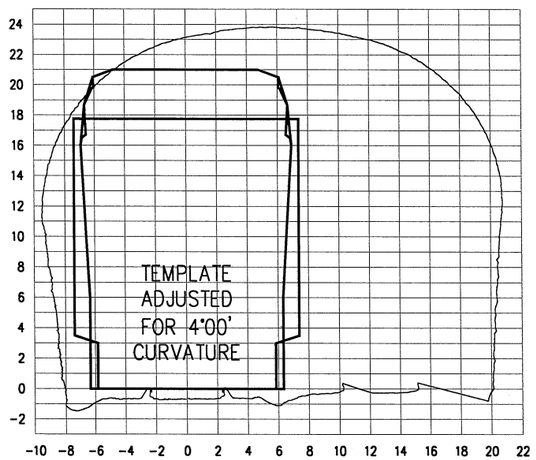

4+51

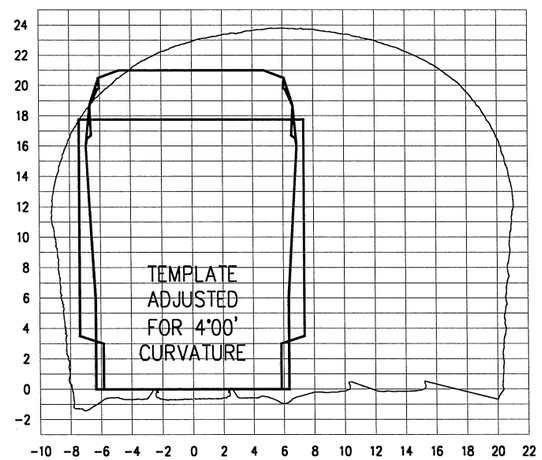

6+01

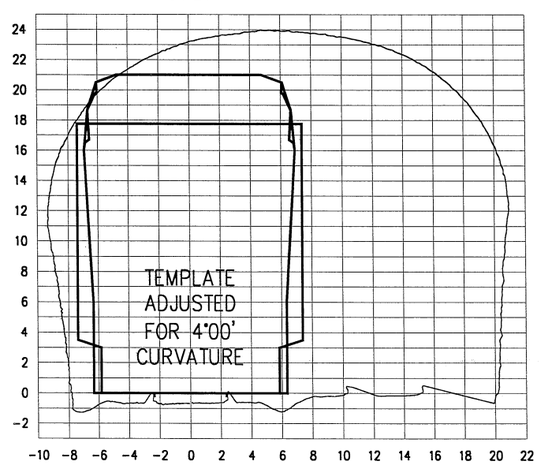

5+02

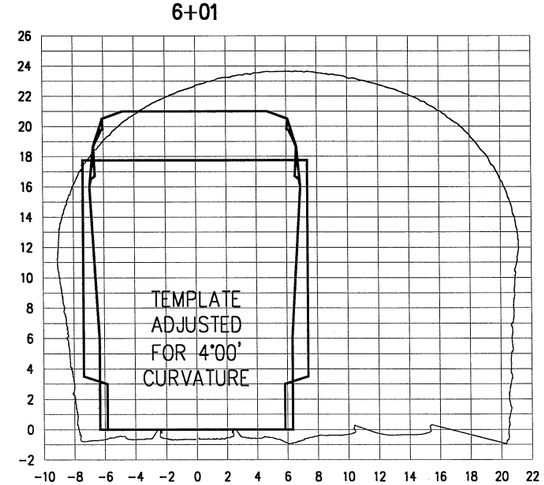

6+51

NOTES:

1. HORIZONTAL DATUM IS PARALLEL TO TRACK. WHERE TRACK IS SUPERELEVATED, DATUM IS NOT PARALLEL WITH GROUND.
2. CROSS SECTION GIVEN FOR STA. 0+00 IS A COMPOSITE FOR THE TUNNEL FROM STA. 0+00 THROUGH 0+50. ALL OF THE SECTIONS FOLLOW THIS CONVENTION.

NOT FOR CONSTRUCTION

SCALE: 1"=100'

50 0 100 200 300

Hatch Mott MacDonald

NORFOLK SOUTHERN

OWNING COMPANY
POCAHONTAS
OPERATING DIVISION
OFFICE OF THE CHIEF ENGINEER - DESIGN AND CONSTRUCTION - ATLANTA, GA.

REV	BY	DATE	DESCRIPTION
P1	DJL	8/5/05	PRELIMINARY ENGINEERING PHASE REPORT

LOCATION: WILLIAMSON TUNNEL, WILLIAMSON, WV

TITLE: TUNNEL CLEARANCE CROSS SECTIONS MAIN #1 - 2 OF 4

DGN | PID No. | VRN | 16510 | MILE POST N-471.62

DWN | FILE No. | DRAWING NUMBER

CHK | DATE APRIL 29, 2005

FILE NAME = p:\MSR\293931\CAD\LASER CAR INFO\471.62 williamson_main1.dgn
DATE/TIME = 08/8/2005 11:35:55 AM

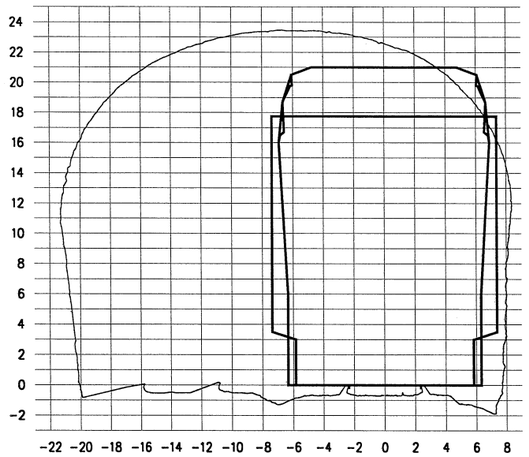

0+00

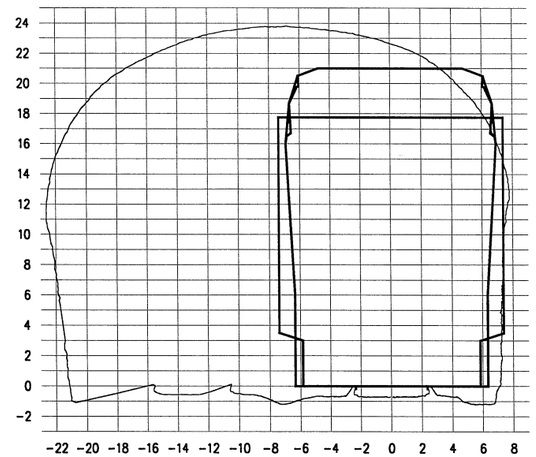

1+50

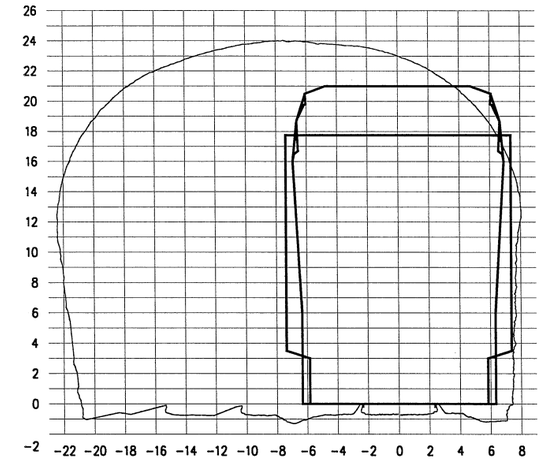

3+01

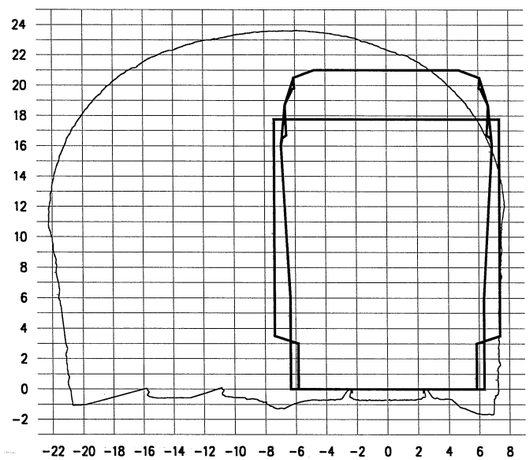

0+50

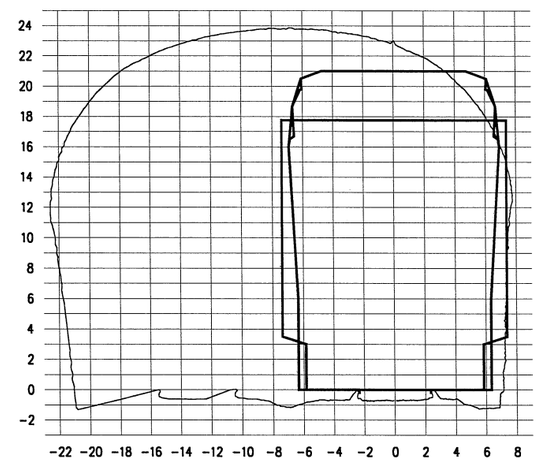

2+00

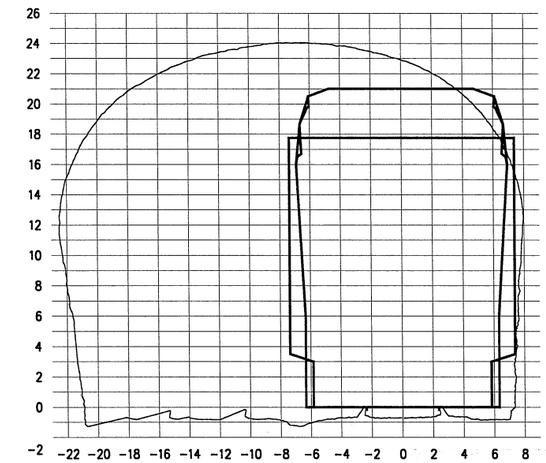

3+51

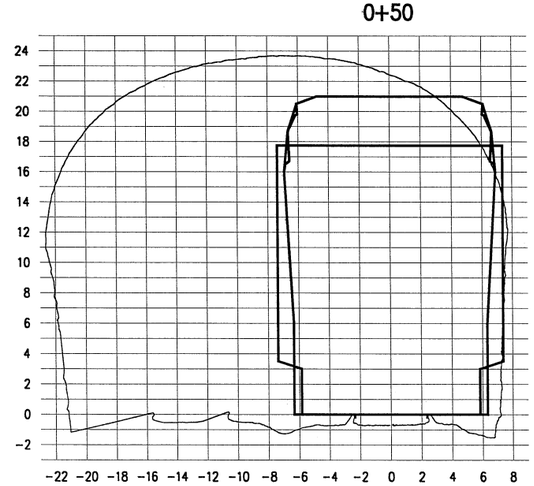

1+00

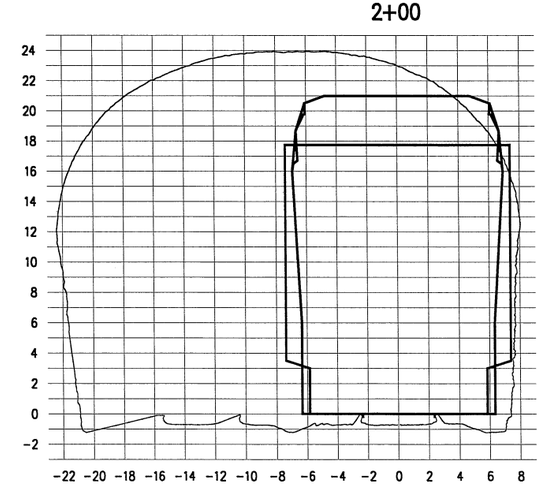

2+50

NOTES:

1. HORIZONTAL DATUM IS PARALLEL TO TRACK. WHERE TRACK IS SUPERELEVATED, DATUM IS NOT PARALLEL WITH GROUND.
2. CROSS SECTION GIVEN FOR STA. 0+00 IS A COMPOSITE FOR THE TUNNEL FROM STA. 0+00 THROUGH 0+50. ALL OF THE SECTIONS FOLLOW THIS CONVENTION.

NOT FOR CONSTRUCTION

SCALE: 1" = 100'

50 0 100 200 300

Hatch Mott MacDonald

NORFOLK SOUTHERN

OWNING COMPANY
POCAHONTAS
OPERATING DIVISION
OFFICE OF THE CHIEF ENGINEER - DESIGN AND CONSTRUCTION - ATLANTA, GA.

REV	BY	DATE	DESCRIPTION
P1	DJL	8/5/05	PRELIMINARY ENGINEERING PHASE REPORT

LOCATION: WILLIAMSON TUNNEL, WILLIAMSON, WV

TITLE: TUNNEL CLEARANCE CROSS SECTIONS MAIN #2 - 3 OF 4

DGN	PID No.	VRN 16510	MILE POST N-471.62
DWN	FILE No.	DRAWING NUMBER	
CHK	DATE APRIL 29, 2005		

FILE NAME = p:\NSR\29399\CAD\LASER CAR INFO\471.62 williamson_main2.dgn
DATE/TIME = 08/11/2005 11:40:02 AM

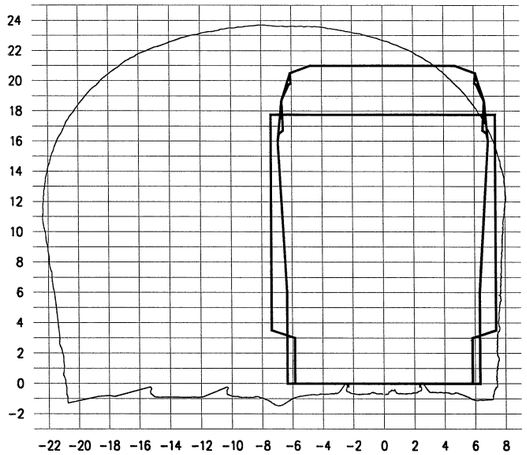

4+00

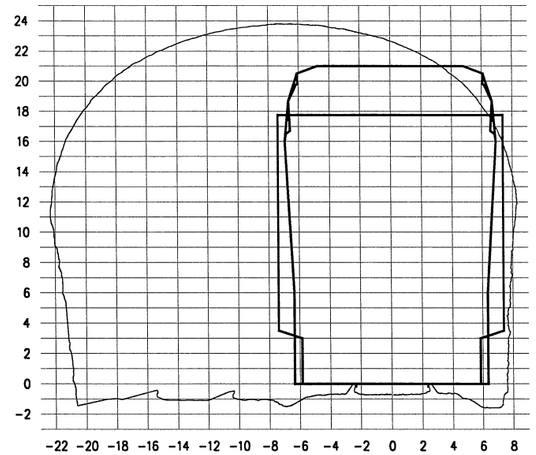

5+51

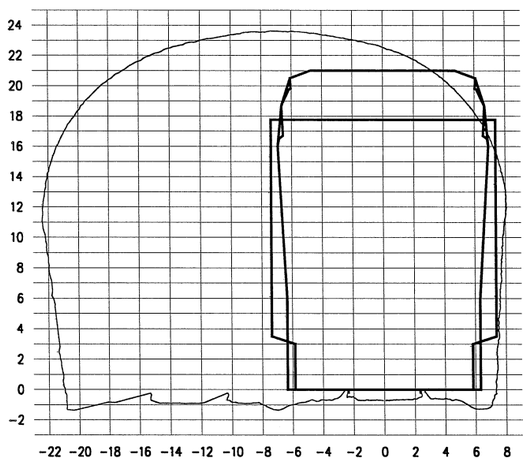

4+50

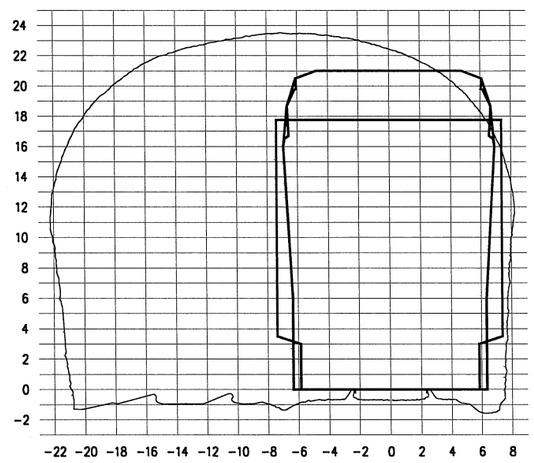

6+00

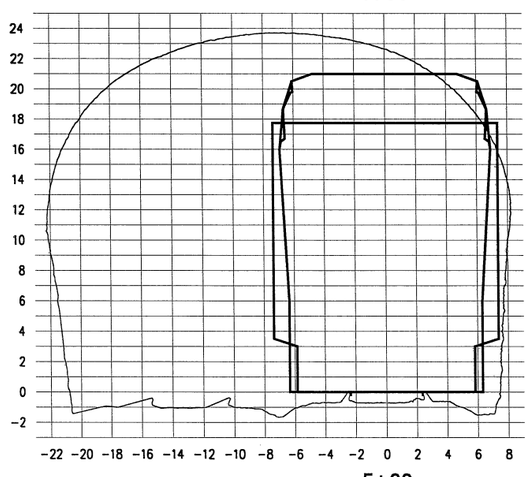

5+00

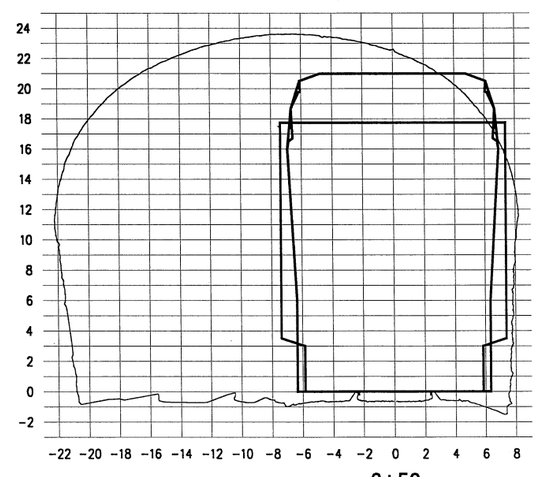

6+50

NOTES:

1. HORIZONTAL DATUM IS PARALLEL TO TRACK. WHERE TRACK IS SUPERELEVATED, DATUM IS NOT PARALLEL WITH GROUND.

2. CROSS SECTION GIVEN FOR STA. 0+00 IS A COMPOSITE FOR THE TUNNEL FROM STA. 0+00 THROUGH 0+50. ALL OF THE SECTIONS FOLLOW THIS CONVENTION.

NOT FOR CONSTRUCTION

SCALE: 1" = 100'

50 0 100 200 300

Hatch Mott MacDonald

NORFOLK SOUTHERN

OWNING COMPANY
POCAHONTAS
OPERATING DIVISION
OFFICE OF THE CHIEF ENGINEER - DESIGN AND CONSTRUCTION - ATLANTA, GA.

REV	BY	DATE	DESCRIPTION
P1	DJL	8/5/05	PRELIMINARY ENGINEERING PHASE REPORT

LOCATION: WILLIAMSON TUNNEL, WILLIAMSON, WV

TITLE: TUNNEL CLEARANCE CROSS SECTIONS MAIN #2– 4 OF 4

DGN	PID No.	VBN	MILE POST
		16510	N-471.62
DWN	FILE No.	DRAWING NUMBER	
CHK	DATE APRIL 29, 2005		

FILE NAME = p:\NSR\293393\CAD\LASER CAR INFO\471.62 williamson_main2.dgn
DATE/TIME = 08/11/2005 11:40:24 AM

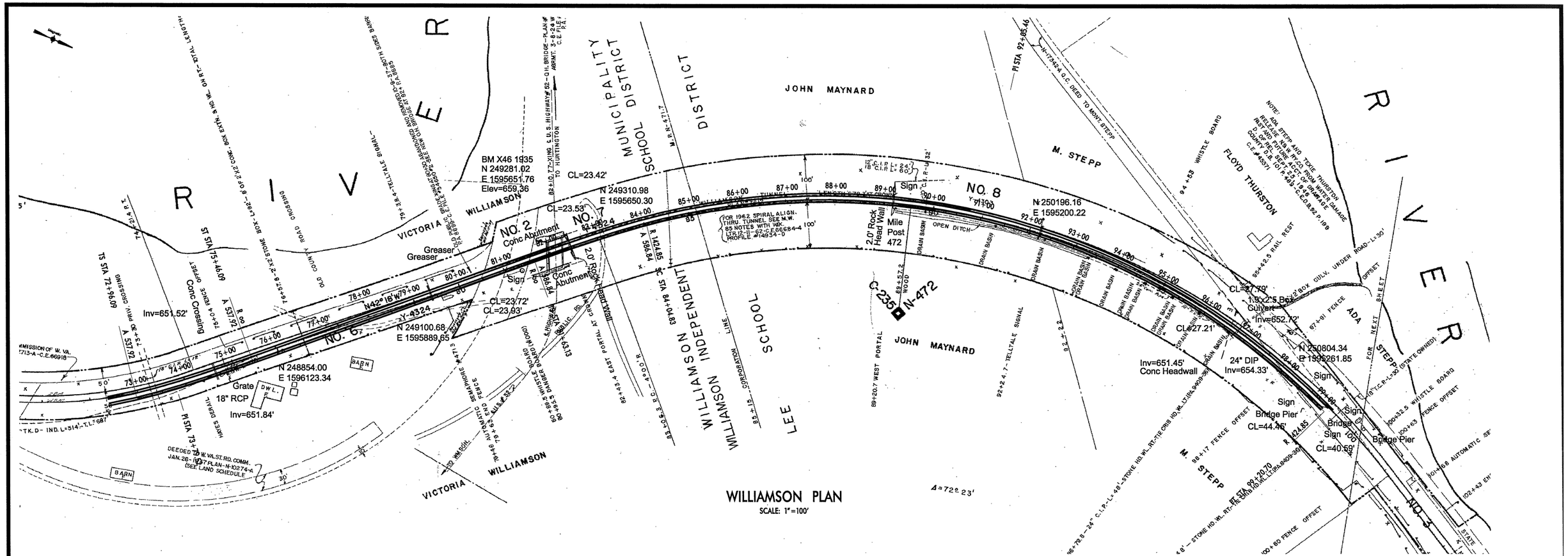

WILLIAMSON PLAN

SCALE: 1"=100'

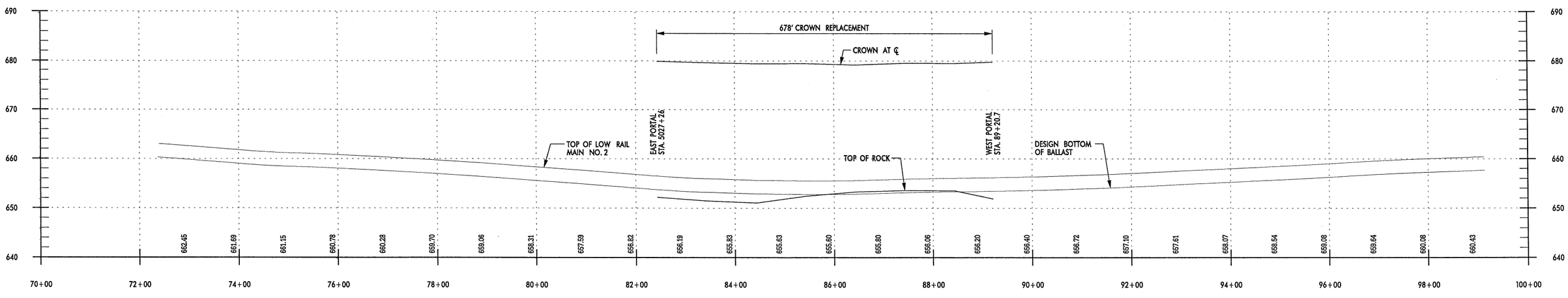

WILLIAMSON PROFILE

SCALE: 1"=100' HORIZ.
1"=10' VERT.

NOT FOR CONSTRUCTION

SCALE: 1"=100'

50 0 100 200 300

Hatch Mott MacDonald

NORFOLK SOUTHERN

OWNING COMPANY
POCAHONTAS
OPERATING DIVISION
OFFICE OF THE CHIEF ENGINEER - DESIGN AND CONSTRUCTION - ATLANTA, GA.

REV	BY	DATE	DESCRIPTION
P2	DJL	10/14/05	PRELIMINARY ENGINEERING PHASE REPORT
P1	DJL	8/19/05	PRELIMINARY ENGINEERING PHASE REPORT

LOCATION: WILLIAMSON TUNNEL, WILLIAMSON, WV

TITLE: PLAN AND PROFILE

DGN | PID No. | VRN | 16510 | MILE POST N-471.62

DWN | FILE No. | DRAWING NUMBER

CHK | DATE APRIL 29, 2005

FILE NAME = P:\NSR\293595\CAD\survey info\471.62 Williamson\471.62 Williamson.dgn
DATE/TIME = 10/12/2005 03:08:45 PM

WILLIAMSON CURVE DATA

Description:
Horizontal Alignment Name: 1
Description:
Style:
Input Factor: 1.0000

		STATION	NORTHING	EASTING
Element: Clothoid				
TS (	6)	72+96.09	248651.70	1596281.41
SPI (	7)	73+79.52	248718.07	1596230.85
ST (	8)	75+46.09	248839.06	1596116.08
Entrance Radius:			1157.44	
Exit Radius:			0.00	
Length:			250.00	
Angle:			6^11'16" Left	
Constant:			537.92	
Long Tangent:			166.77	
Short Tangent:			83.43	
Long Chord:			249.87	
Xs:			249.71	
Ys:			8.99	
P:			2.25	
K:			124.95	
Tangent Direction:			322^41'58"	
Radial Direction:			52^41'58"	
Chord Direction:			318^34'26"	
Radial Direction:			46^30'42"	
Tangent Direction:			316^30'42"	
Element: Linear				
ST (	8)	75+46.09	248839.06	1596116.08
TS (	3)	81+63.12	249286.73	1595691.43
Tangent Direction:			316^30'42"	
Tangent Length:			617.03	
Element: Clothoid				
TS (	3)	81+63.12	249286.73	1595691.43
SPI (	9)	83+24.32	249403.67	1595580.50
SC (	10)	84+04.82	249466.66	1595530.17
Entrance Radius:			0.00	
Exit Radius:			1424.85	
Length:			241.70	
Angle:			4^51'35" Right	
Constant:			586.84	
Long Tangent:			161.19	
Short Tangent:			80.62	
Long Chord:			241.62	
Xs:			241.53	
Ys:			6.83	
P:			1.71	
K:			120.82	
Tangent Direction:			316^30'42"	
Radial Direction:			46^30'42"	
Chord Direction:			318^07'53"	
Radial Direction:			51^22'16"	
Tangent Direction:			321^22'16"	
Element: Circular				
SC (	10)	84+04.82	249466.66	1595530.17
PI (	)	92+43.60	250121.91	1595006.54
CC (	11)		250356.15	1596643.27
PT (	12)	99+20.70	250897.74	1595325.36
Radius:			1424.85	
Delta:			60^58'07" Right	
Degree of Curvature(Chord):			4^01'19"	
Length:			1516.19	
Length(Chorded):			1515.88	
Tangent:			838.78	
Chord:			1445.66	
Middle Ordinate:			196.96	
External:			228.55	
Tangent Direction:			321^22'16"	
Radial Direction:			51^22'16"	
Chord Direction:			351^51'20"	
Radial Direction:			112^20'24"	
Tangent Direction:			22^20'24"	

FILE NAME = P:\NSR\293939\CAD\survey Info\471.62 Williamson\471.62 Williamson curve data.dgn
DATE/TIME = 10/12/2005 02:05:53 PM

NOT FOR CONSTRUCTION

SCALE: 1" = 100'

50 0 100 200 300

Hatch Mott MacDonald

NORFOLK SOUTHERN

OWNING COMPANY
POCAHONTAS
OPERATING DIVISION
OFFICE OF THE CHIEF ENGINEER - DESIGN AND CONSTRUCTION - ATLANTA, GA

REV.	BY	DATE	DESCRIPTION
PT	DJL	8/19/05	PRELIMINARY ENGINEERING PHASE REPORT

LOCATION: WILLIAMSON TUNNEL, WILLIAMSON, WV

TITLE: CURVE DATA

DGN	PID No.	VRN	16510	MILE POST	N-471.62
DWN	FILE No.			DRAWING NUMBER	
CHK	DATE APRIL 29, 2005				

LOCATION	CHANGES MADE	PLAN NO.	ADDITIONS A.F.E.	ADDITIONS COMP. REPORT NO.	ADDITIONS COMP. REPORT R.	ADDITIONS COMP. REPORT YEAR	RETIREMENTS A.F.E.	RETIREMENTS COMP. REPORT NO.	RETIREMENTS COMP. REPORT R.	RETIREMENTS COMP. REPORT YEAR
5+06	INSTALL BASE STATION FOR RADIO		30007			1974				
5+26.9	ADDED RIO CROSSINGS	RIV 7.50-FEP					RA.17665			1970
5+25.3	CONT'D SLATER FROM PAGE 14 ON WALKWAY	C.E.6.5015				7-19-76				

SCHEDULE OF PROPERTY.

NO.	GRANTOR	GRANTEE	INSTRUMENT	DATE	RECORD	CUST. NO.	REMARKS
1	J. B. SLATER,	W. VA. & I. R.R. CO.	CONDEMNED	JULY 27, 1891	D.B.	8251	C.E.D.B. 19 PAGE 187 PART OF NO. 1 CONVD. TO CITY OF WILLIAMSON DEED DATED JUNE 22, 1954 - PLAN N-25288 - CO. D.B. 125 P. 209 C.E.D.B. 96 P. 225
2	FLOYD AND W. J. WILLIAMSON	"	"	JULY 27, 1891	DB	8250	19 P. 187 PART OF NO. 2 DEEDED TO WEST VIRGINIA STATE ROAD COMMISSION JAN. 26, 1937 - C.E.D.B. 91 P. 99 PL.AN 0027-A - C.E.D.4450 -"2-V-R 0194-
3	THOMAS STEPP,	"	"	JULY 31, 1891	DB	8253	19 - 211 PART OF NO. 3 DEEDED TO K. B. STEPP SEPT. 27, 1938 " " " " N 17342 " 64292 V.P.A. 8244
4	J. B. SLATER AND WIFE,	N&W RY. CO.	DEED	MAR. 25, 1903	DB 11 242	8251-1	23 458 PART OF PAR. 3 Q.C. DEED TO MONT. STEPP SEPT. 24, 1940 " " 86" 212 " N 17342-A " 64292 " 9993
5	DO	"	"	MAR. 25, 1903	DB 11 242	8251-1	C.E.D.B. 23 PAGE 458
6	VICTORIA WILLIAMSON,	"	"	MAR. 25, 1903	DB 12 61	8252-A	" " 25 " 468
6	JOHN C. MAYO AND WIFE,	"	"	APR. 29, 1903	DB 1 202	8252-A	RELEASE DEED C.E.D.B. 25 PAGE 493
7	VICTORIA WILLIAMSON,	"	"	MAR. 25, 1903	DB 12 61	8252-A	" " 25 " 468
7	JOHN C. MAYO AND WIFE,	"	"	APR. 29, 1903	DB 1 202	8252-A	RELEASE DEED " " 25 " 493
8	CHARLOTTE STEPP, ET. AL.	"	CONDEMNED	MAY 9, 1903	DB 16 94	8253-A	" " 25 " 277
9	FLOYD WILLIAMSON,	"	DEED	JANY 23, 1893	DB 9 424 FEBY 8, 1893	8252	" " 10 " 414

PART OF PCL. 9 D.O.D.Ac.71 PLAN N-21727-A QUITCLAIMED TO GUS TRUTRAS DEED DATED MAY 23, 1968, COUNTY D.B. 0.0 PAGE 423 - C.E.D.B. 24 P. 296
DO.D.Ac.RW-D1727-D, Q.C.D. DATED MAY 23, 1960, CO. D.B. 115 P. 154 - C.E. D.B. 33 P. 288 CUST. NO. 73
PART OF NEW CONV. TO GUS TRUTRAS - DEED 3-28-57 - CO. D.B. 131 P. 566 - C.E. D.B. 100 P. 463 - N-21727-E CUST. NO. 74

This map was not prepared or intended for use as a real estate title map. The railway company does not represent or suggest that the property lines and right-of-way lines shown on the map are accurate or that any other information on the map is correct. The company does not represent that it has checked this map for accuracy.

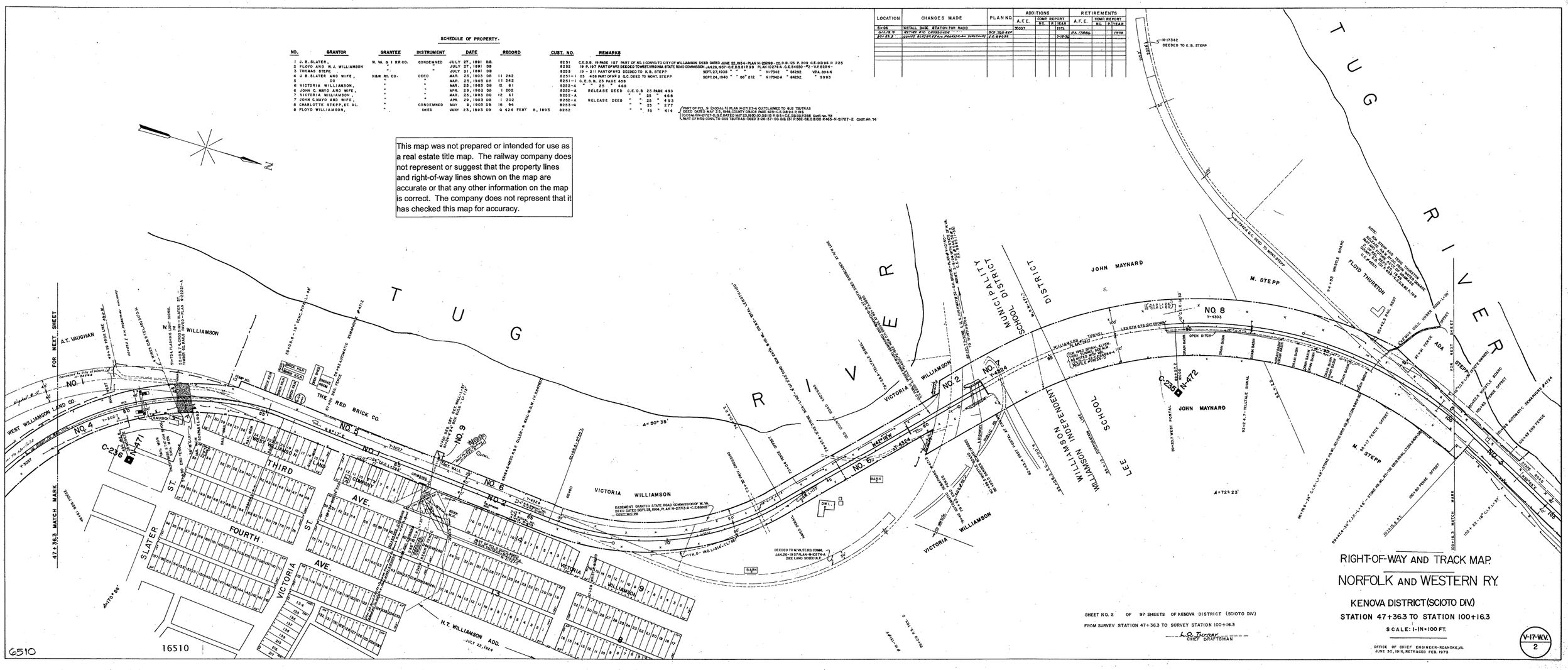

SHEET NO. 2 OF 97 SHEETS OF KENOVA DISTRICT (SCIOTO DIV.)

FROM SURVEY STATION 47+36.3 TO SURVEY STATION 100+16.3

L. O. Turner
CHIEF DRAFTSMAN

RIGHT-OF-WAY AND TRACK MAP.

NORFOLK AND WESTERN RY.

KENOVA DISTRICT (SCIOTO DIV.)

STATION 47+36.3 TO STATION 100+16.3

SCALE: 1-IN = 100 FT.

OFFICE OF CHIEF ENGINEER-ROANOKE, VA.
JUNE 30, 1916, RETRACED FEB. 1973

V-17-W.V.
2