REG	STATE	PROJECT	SHEET NO.

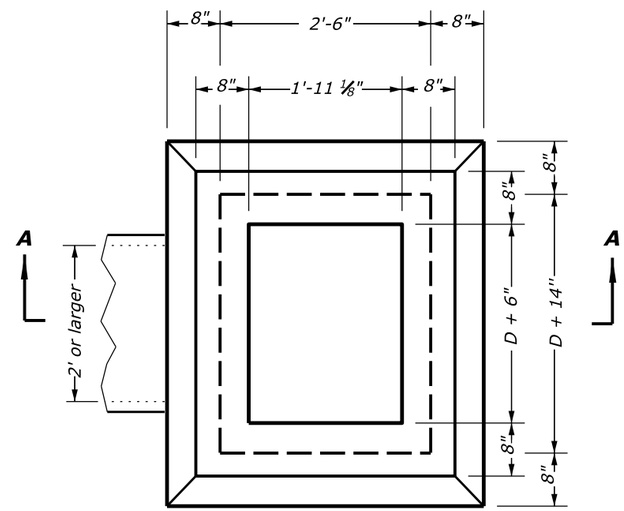

NOTES:

1. At the option of the Contractor walls less than 4 feet may be of either concrete block or concrete as shown.

2. Construct Type 6A-A inlets for pipes 24 inch and larger for "Limited Headroom", unless otherwise directed by the CO.

3. Construct inlets parallel to the roadway centerline and grade. For pipes on skew, adapt inlets as directed by the CO.

4. Construct ladder rungs of f" round or 3/4" round or square steel or wrought iron where depth exceeds 4"

5. For frames and gratings, minor variations in design and dimensions are permitted to allow manufacturers standards. All grates are to be bicycle safe.

6. Orient curved vanes toward direction of stormwater flow. In a sump condition, orientation of curved vanes can be in either direction. Contractor is responsible for correct grate orientation towards stormwater flow.

7. Construct Type 6A-6 metal frame and grating for 6" reveal, unless otherwise directed by the CO.

8. See Detail E604-9 for metal frame and grate, Type 6A-6 (curved vane grate) details.

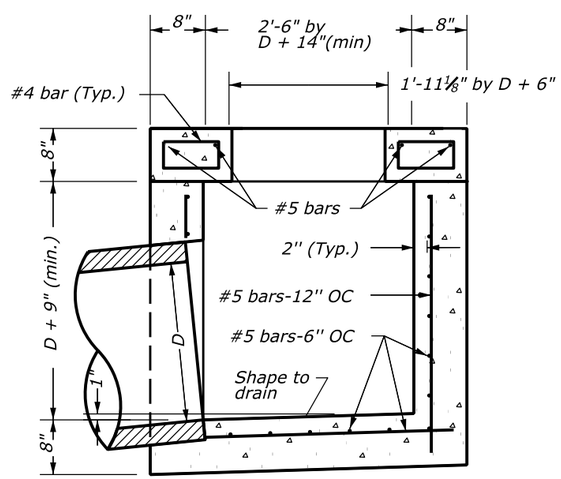

Limited headroom

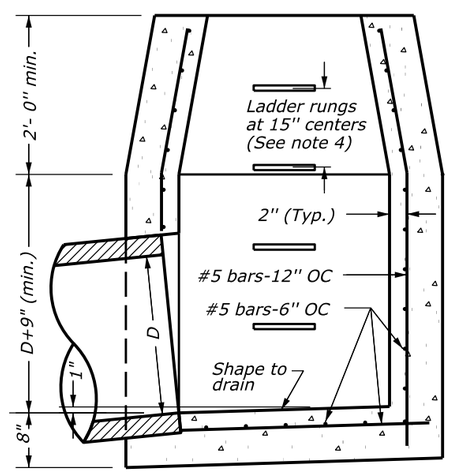

Ample headroom

SECTION A-A

TYPE 6A-A INLET

(for 24" or larger pipes)

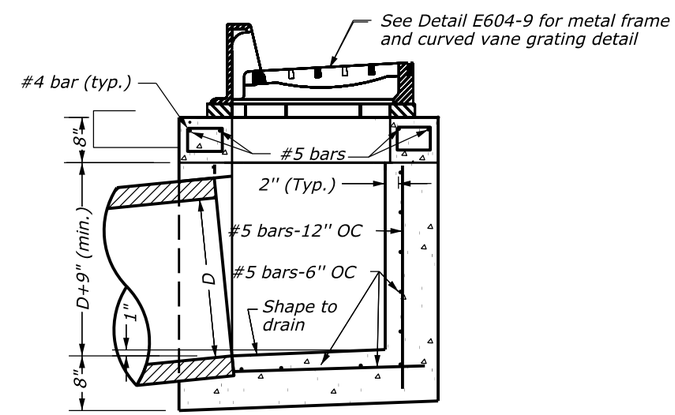

SECTION A-A

TYPE 6A-6 INLET

(up to 24" pipes)

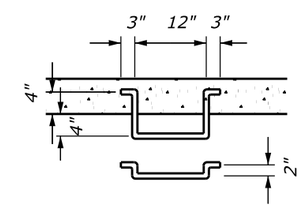

LADDER RUNG

NO SCALE

U.S. DEPARTMENT OF TRANSPORTATION
FEDERAL HIGHWAY ADMINISTRATION
EASTERN FEDERAL LANDS HIGHWAY DIVISION

U.S. CUSTOMARY DETAIL

INLET, TYPE 6A-6

Sheet 1 of 2

DETAIL APPROVED FOR USE

APPROVED : MAY 2011

DETAIL E604-09

REG	STATE	PROJECT	SHEET NO.

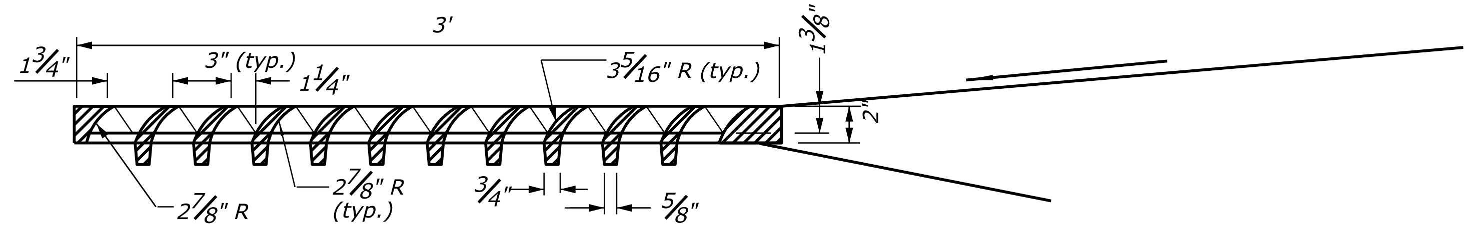

FRONT ELEVATION GRATE TYPE 6A-6 MOUNTED (CURVED VANE GRATINGS)

NOTES:

1. For frames and gratings, minor variations in design and dimensions are permitted to allow manufacturers standards. All grates are to be bicycle safe.

2. Orient curved vanes toward direction of stormwater flow. In a sump condition, orientation of curved vanes can be in either direction. Contractor is responsible for correct grate orientation towards stormwater flow.

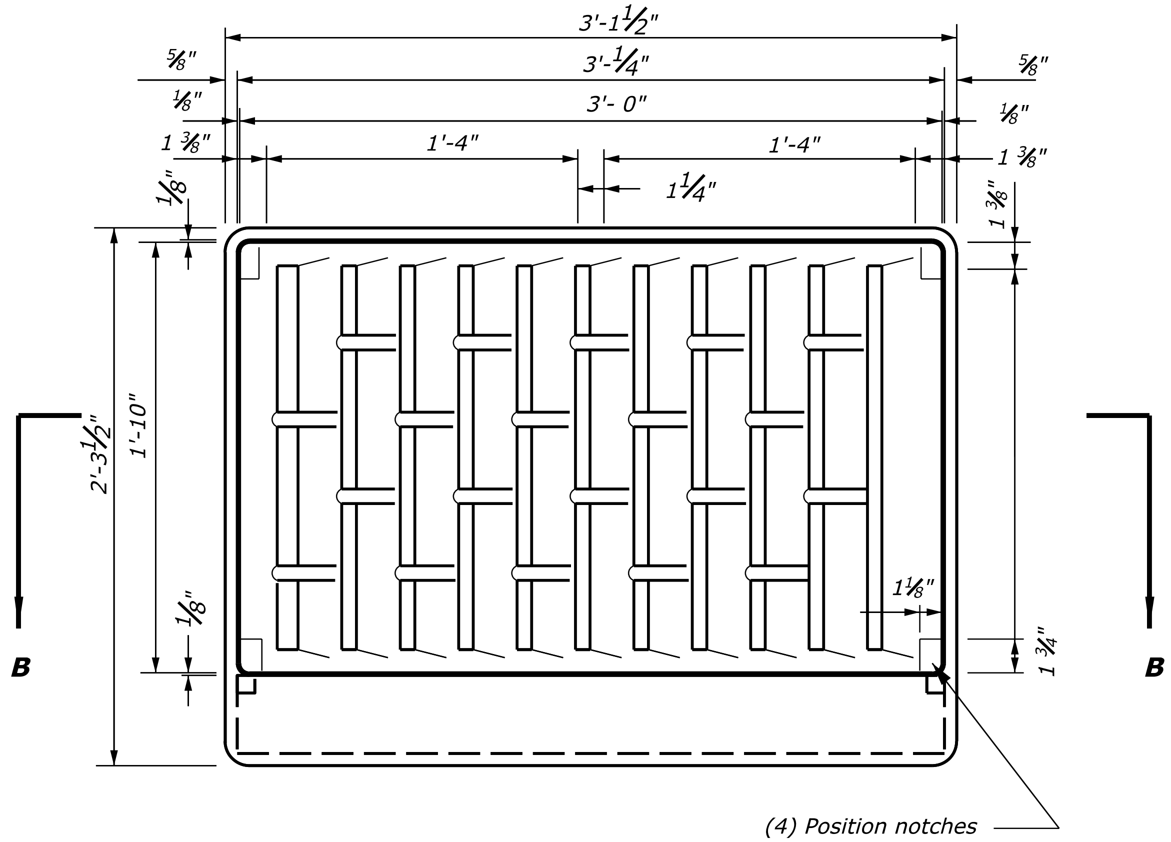

TOP VIEW FRAME GRATE TYPE 6A-6 MODIFIED (CURVED VANE GRATINGS)

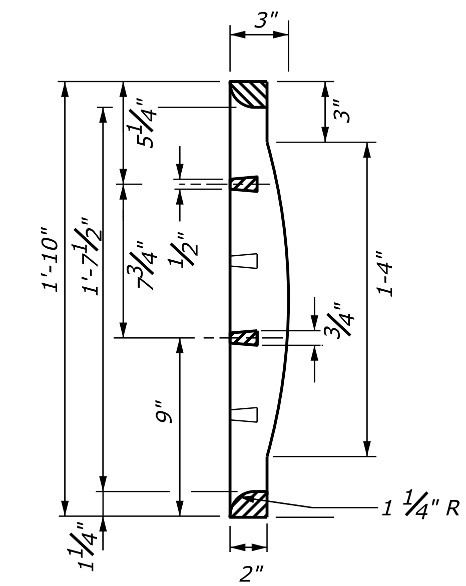

SIDE ELEVATION GRATE TYPE 6A-6 MODIFIED (CURVED VANE GRATINGS)

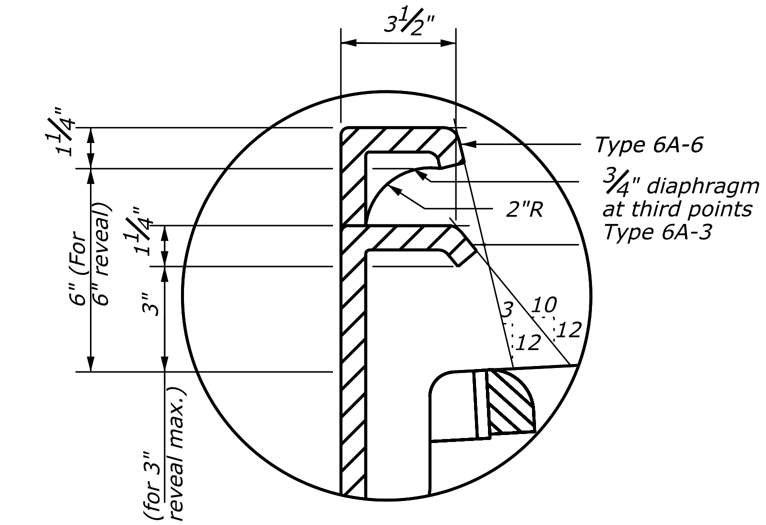

DETAIL A

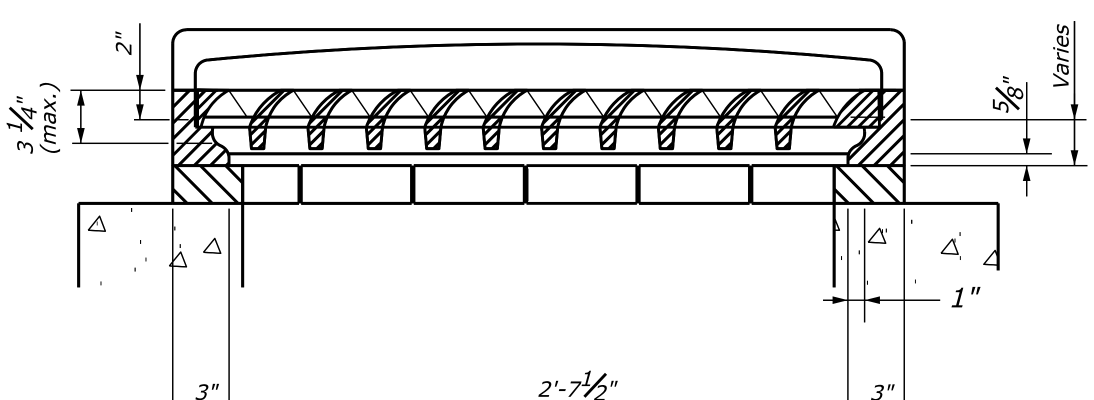

SECTION B-B

METAL FRAMES AND GRATING TYPE 6A-6 MODIFIED

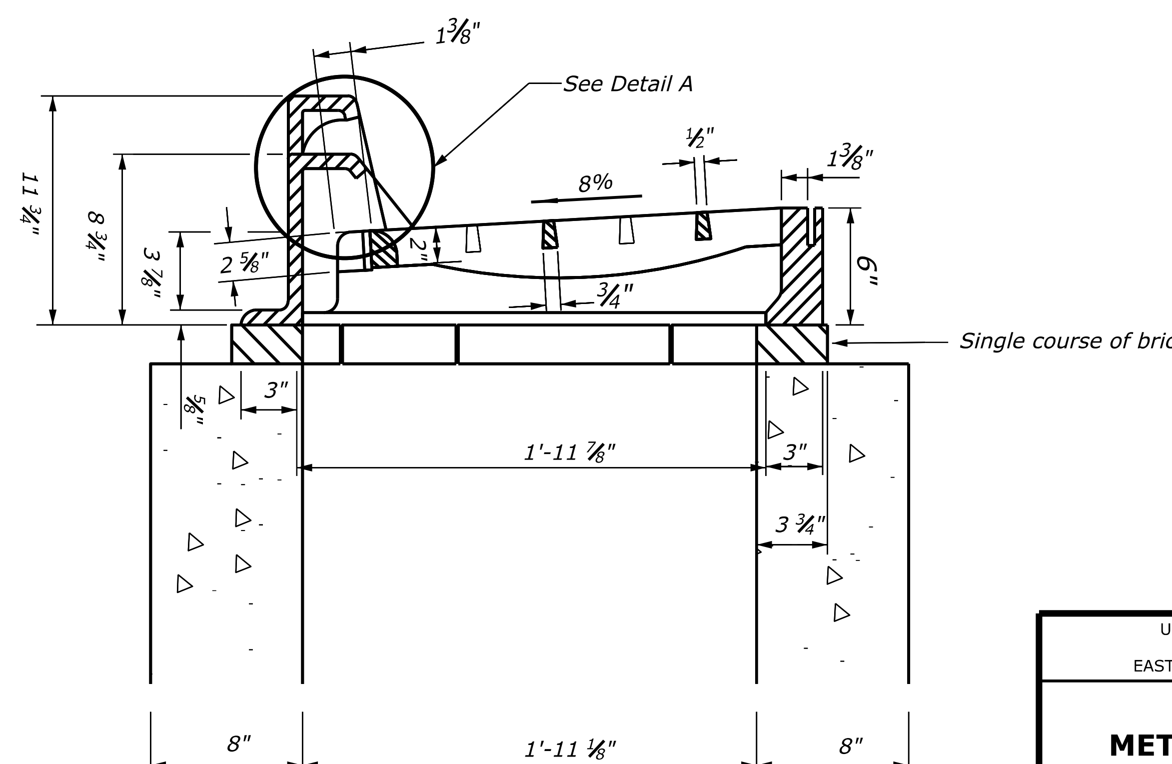

NO SCALE

U.S. DEPARTMENT OF TRANSPORTATION
FEDERAL HIGHWAY ADMINISTRATION
EASTERN FEDERAL LANDS HIGHWAY DIVISION

U.S. CUSTOMARY DETAIL

METAL FRAME AND GRATE,
TYPE 6A-6 (CURVED VANE GRATE)

Sheet 2 of 2

DETAIL APPROVED FOR USE	DETAIL
APPROVED : MAY 2011	E604-09

$$$$DATE$$$$ $TIME$ $$$$DGN$$