REG	STATE	PROJECT	SHEET NO.

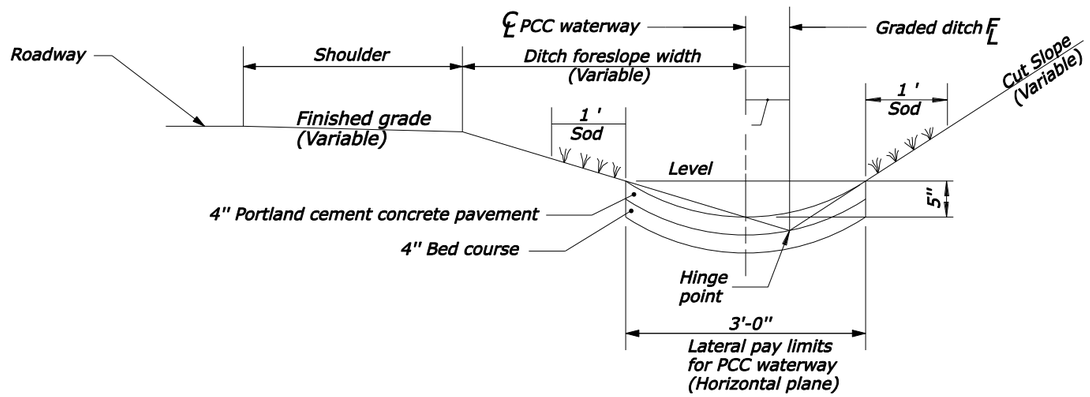

PORTLAND CEMENT CONCRETE WATERWAY

NOTES:

1. The approximate shape of the Portland Cement Concrete waterway is an arc with a radius of 2.9 feet.

2. At inlets and other special locations, widen and shape paved waterway to drain.

3. Construct Portland Cement Concrete waterway in uniform sections 20 feet in length, except closure sections are not less than 5 feet in length. Place expansion joints, with curtain walls at 100 foot intervals.

4. At outlet end of each Portland Cement Concrete waterway, construct a curtain wall on the downstream end of the last section of waterway.

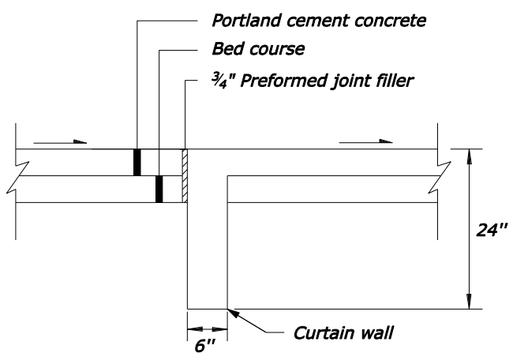

SECTION A-A

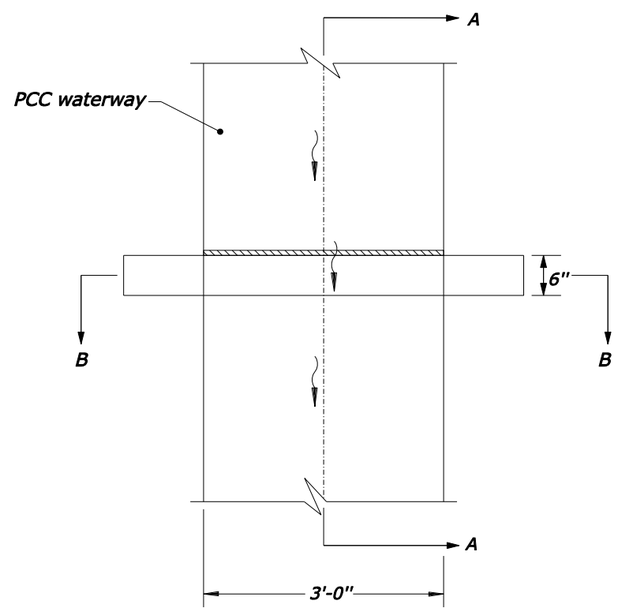

PLAN

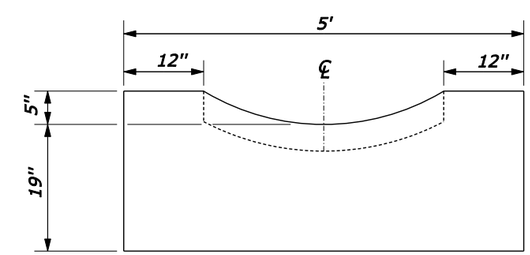

SECTION B-B

NO SCALE

EXPANSION JOINT FOR PORTLAND CEMENT CONCRETE WATERWAY

U.S. DEPARTMENT OF TRANSPORTATION
FEDERAL HIGHWAY ADMINISTRATION
EASTERN FEDERAL LANDS HIGHWAY DIVISION

U.S. CUSTOMARY DETAIL

PORTLAND CEMENT CONCRETE WATERWAY TYPE 4

DETAIL APPROVED FOR USE	DETAIL
APPROVED : MAY 2011	E608-01

7/7/2011 7:48:37 AM M:\Standards\EFLHD_Details\Drawings\V8 draft_do not use\ERIC'S CADD WORK\vest today\608\608dgns\sf6080i_detail.dgn