REG	STATE	PROJECT	SHEET NO.

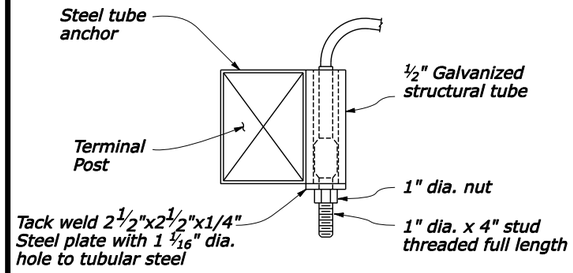

DETAIL 'A'

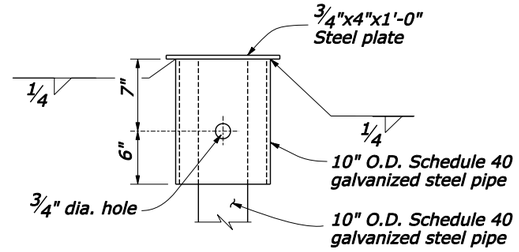

DETAIL 'B'

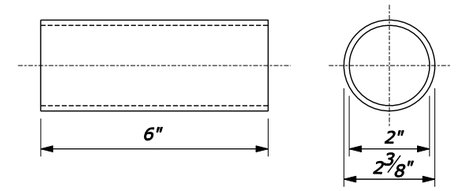

BREAKWAY TERMINAL POST SLEEVE
ARTBA F-34-76

TERMINAL POST

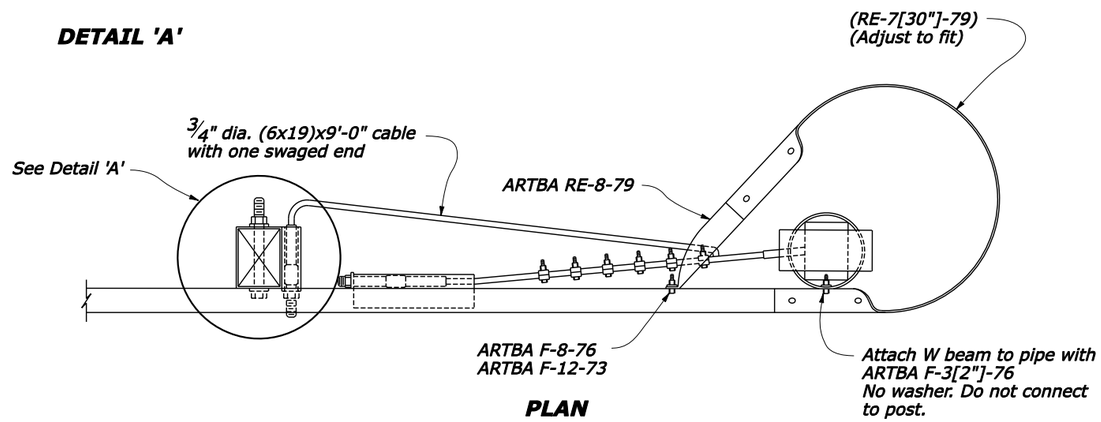

PLAN

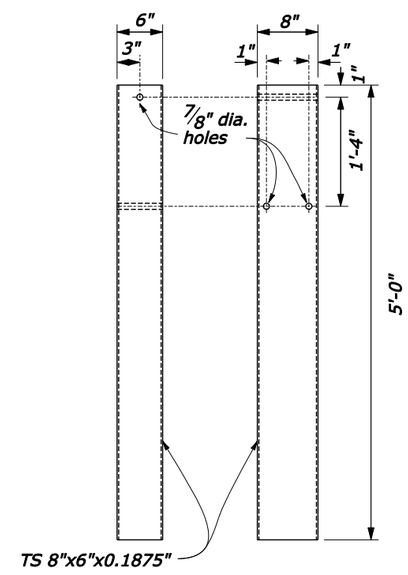

STEEL TUBE ANCHOR

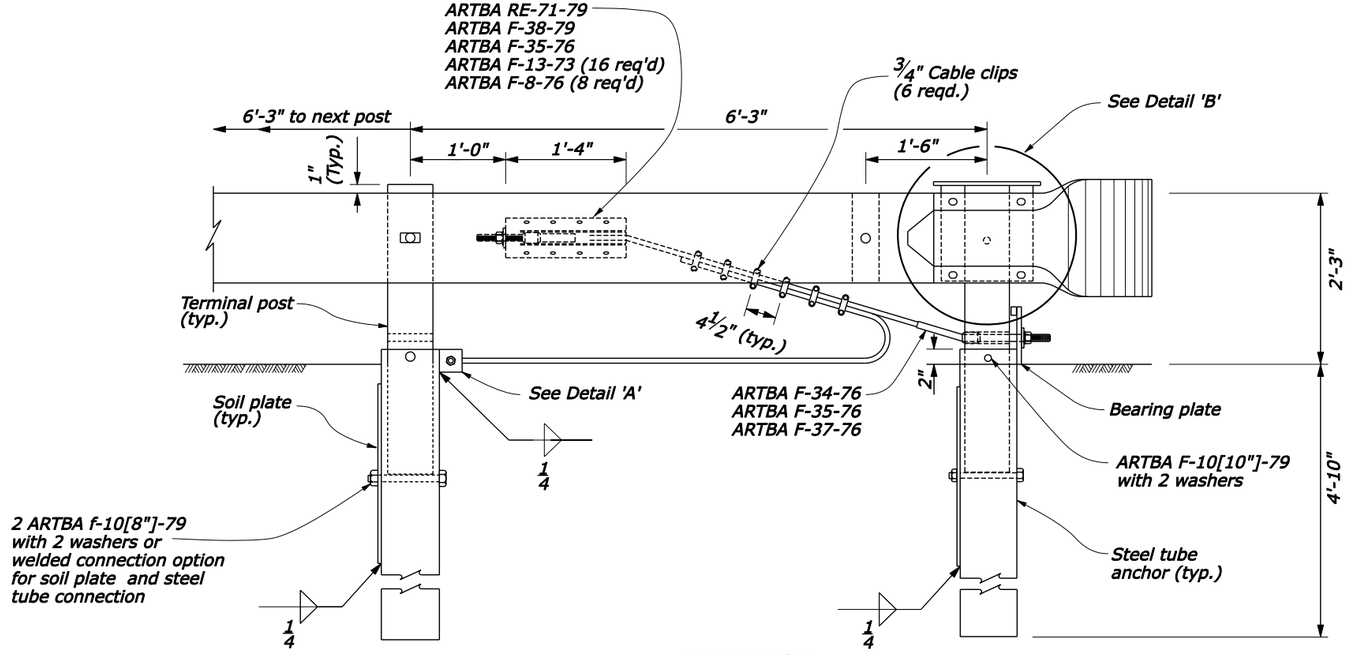

ELEVATION

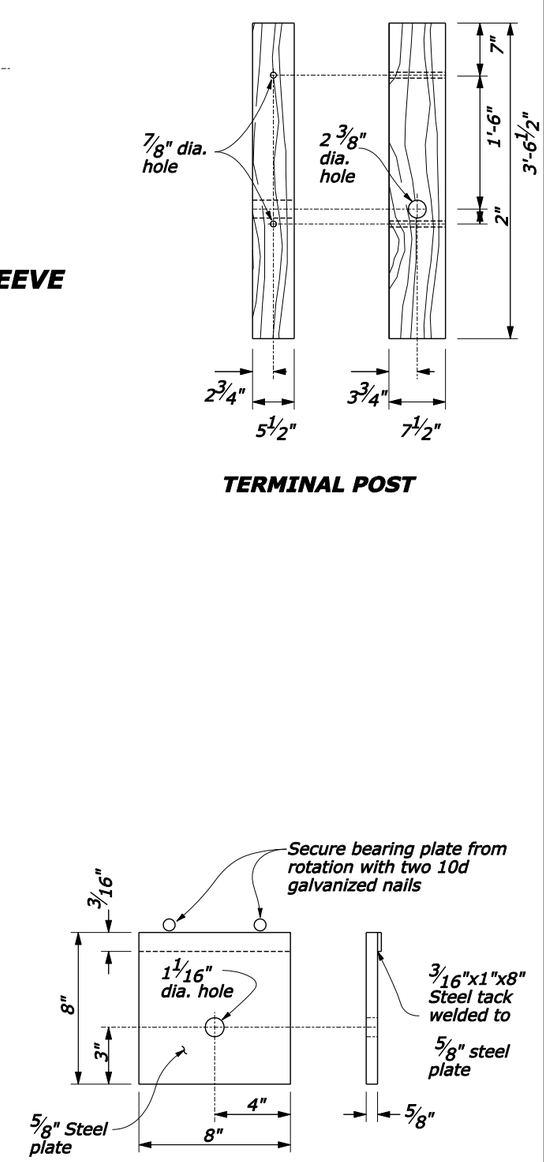

BEARING PLATE

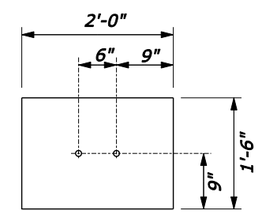

SOIL PLATE (2 REQD.)

NO SCALE

U.S. DEPARTMENT OF TRANSPORTATION
FEDERAL HIGHWAY ADMINISTRATION
EASTERN FEDERAL LANDS HIGHWAY DIVISION

U.S. CUSTOMARY DETAIL

CRT W BEAM GUARDRAIL STEEL TUBE ANCHOR CRT ANCHORAGE ASSEMBLY CRT POSTS

DETAIL APPROVED FOR USE

APPROVED : MAY 2011

DETAIL E617-22

7/7/2011 9:35:23 AM M:\Standard\EFLHD_Detail\Drawings\V8 draft_do not use\ERIC'S CADD WORK\test today\617\dgns\s617722_detail.dgn