REG	STATE	PROJECT	SHEET NO.

Notes:

1. See Detail 617-68, sheet 2 of 3 for Sections A-A through C-C, and post connection Detail A. See Detail 617-68, sheet 3 of 3, for steel rail details.

2. Use weathering steel for all structural steel and fastener hardware.

3. Test Level 2 Steel - Backed Timber transition connections are to be paid for under a separate pay item, Connection to Structure, item 61706 in the bid schedule.

4. Transition shown for curved end structure. For transition to a straight parapet end, install the timber rail so that the face of the timber rail is offset 1-inch towards the roadway.

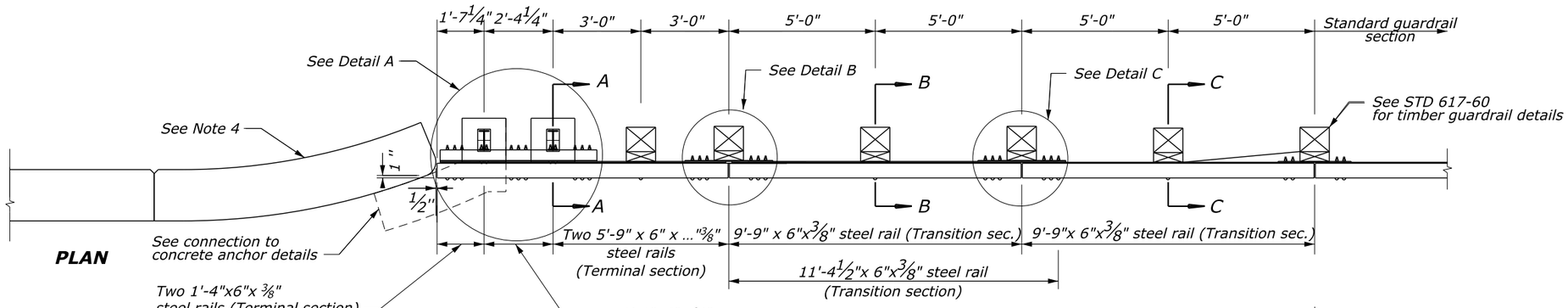

PLAN

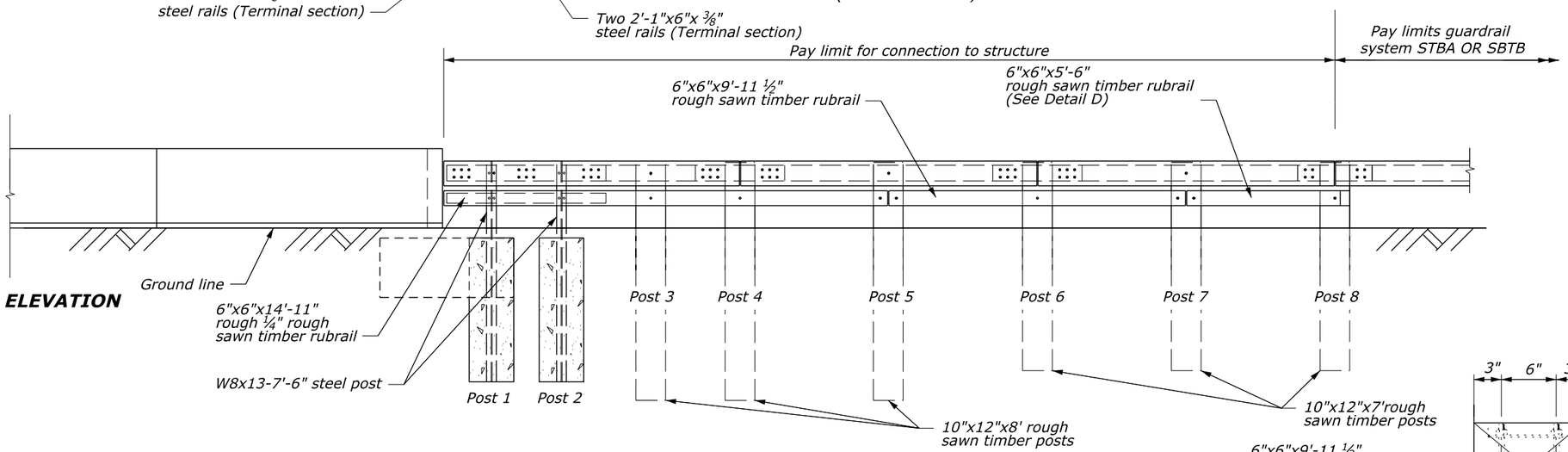

ELEVATION

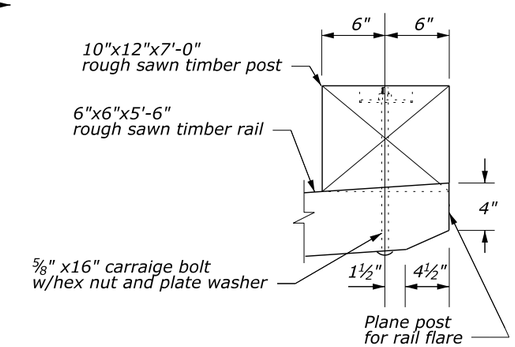

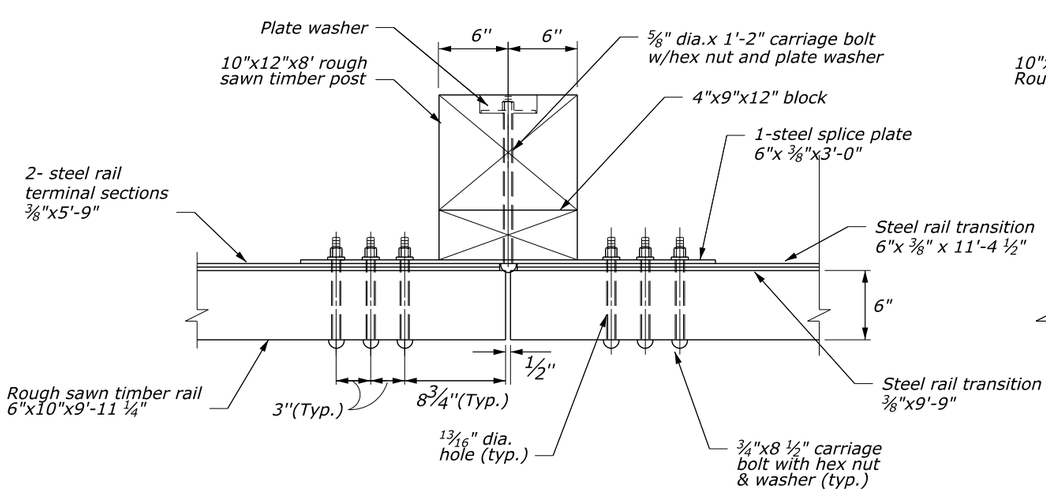

DETAIL B

POST CONNECTION PLAN

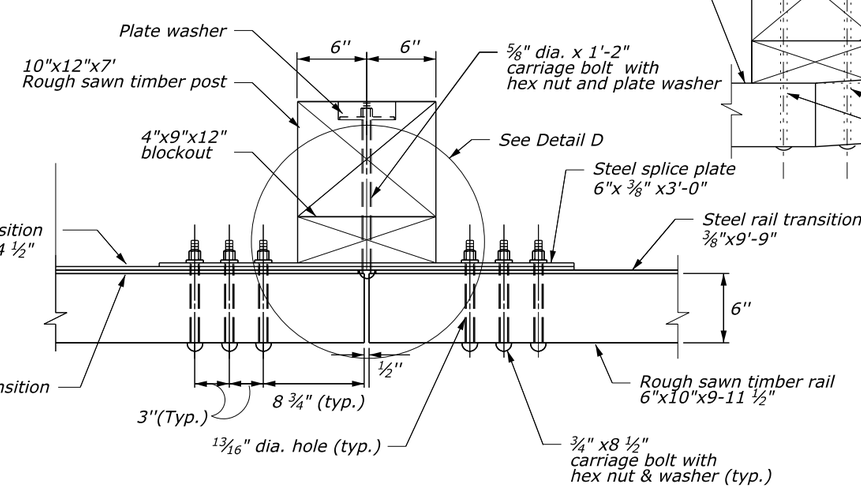

DETAIL C

POST CONNECTION PLAN

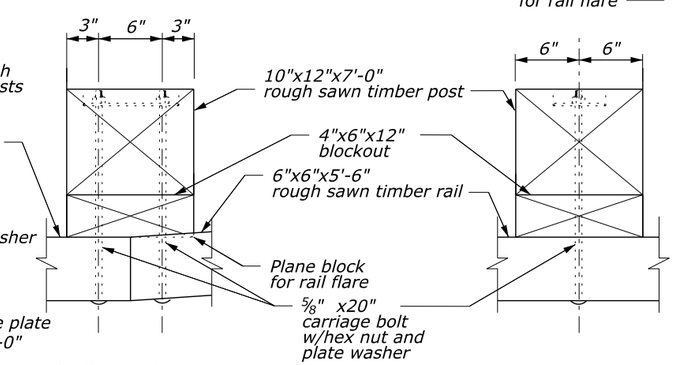

DETAIL D

RUBRAIL CONNECTION PLAN

NO SCALE

U.S. DEPARTMENT OF TRANSPORTATION
FEDERAL HIGHWAY ADMINISTRATION
EASTERN FEDERAL LANDS HIGHWAY DIVISION

U.S. CUSTOMARY DETAIL

STEEL-BACKED TIMBER GUARDRAIL TEST LEVEL 2 TRANSITION TO STRAIGHT OR CURVED-END STRUCTURE

Sheet 1 of 3

DETAIL APPROVED FOR USE

APPROVED : MAY 2011

DETAIL E617-68

01-Jun-2011 09:29 AM 9:29:33 AM M:\Standard\EFLHD_Detail\Drawings\V8 draft_do not use\ERIC'S CADD WORK\EFL_DET_wVERDANA\s617t68_detail.dgn

REG	STATE	PROJECT	SHEET NO.

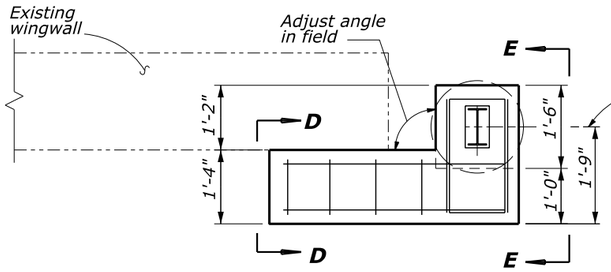

PLAN FOR NON-FLARED WINGWALL

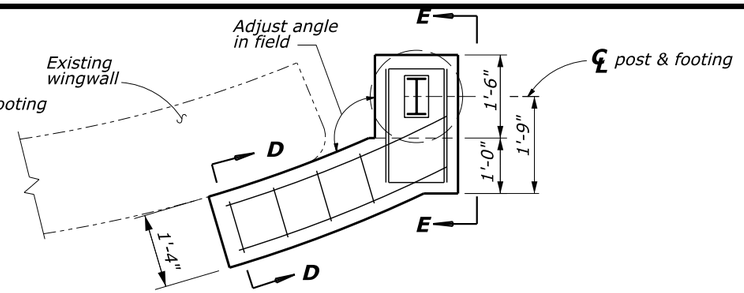

PLAN FOR FLARED WINGWALL

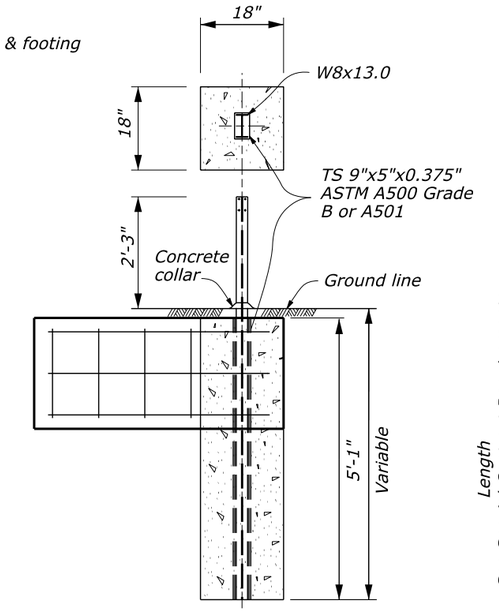

Use 20" diameter round anchor or 18" square anchor. Reduced sized acceptable in solid rock.

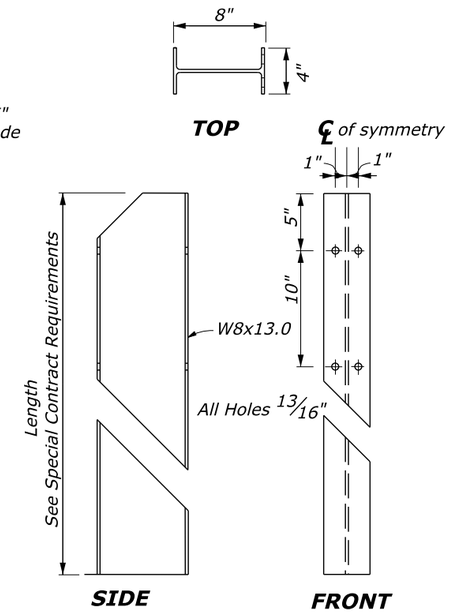

CONCRETE ANCHOR FOR GUARDRAIL POST

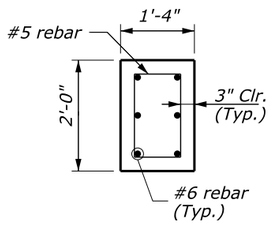

SECTION D-D
(Wingwall not shown)

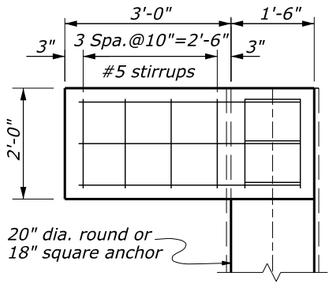

ELEVATION
(Wingwall not shown)

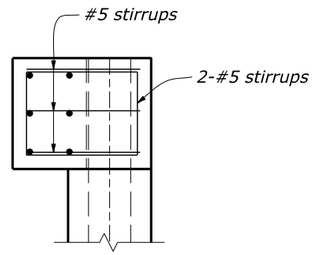

SECTION E-E

CONNECTION TO CONCRETE ANCHOR
(Post not shown)

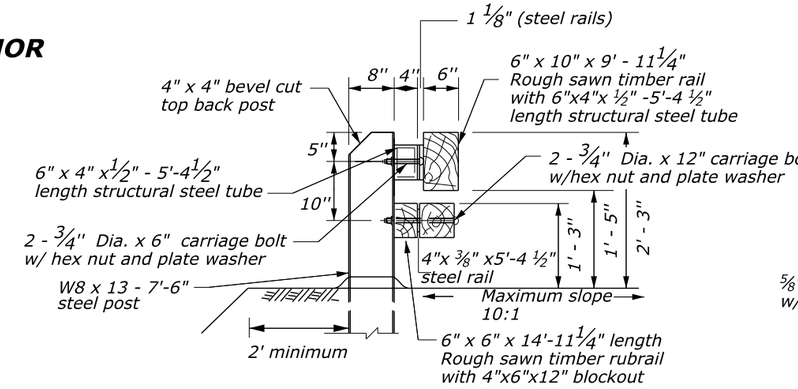

SECTION A-A

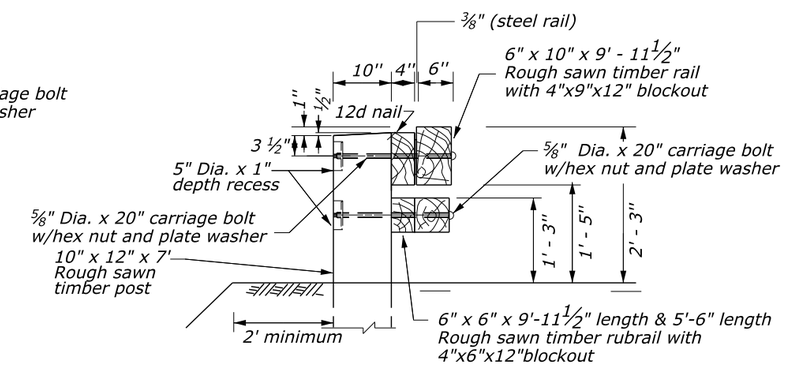

SECTION C-C

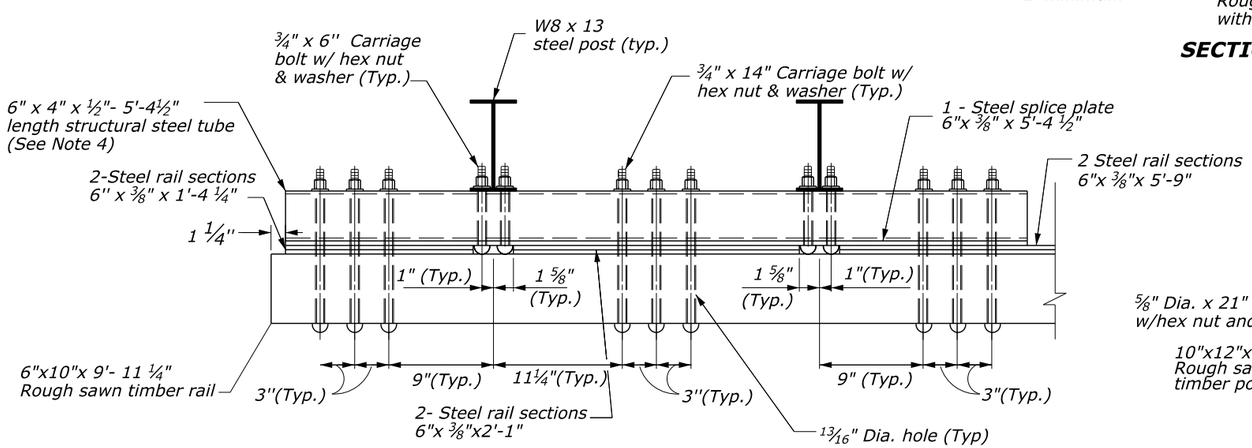

DETAIL A
POST CONNECTION PLAN

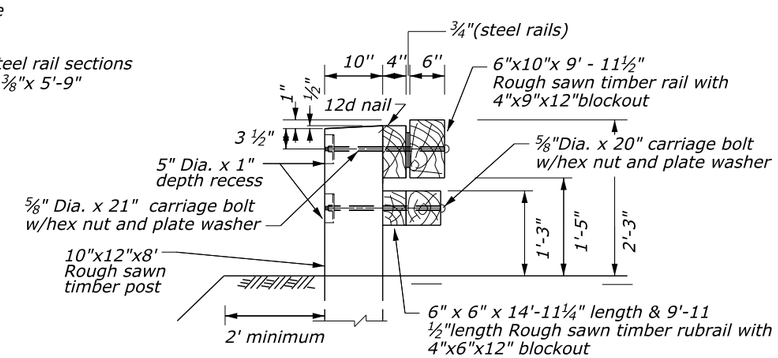

SECTION B-B

NO SCALE

U.S. DEPARTMENT OF TRANSPORTATION
FEDERAL HIGHWAY ADMINISTRATION
EASTERN FEDERAL LANDS HIGHWAY DIVISION

U.S. CUSTOMARY DETAIL

STEEL-BACKED TIMBER GUARDRAIL TEST LEVEL 2 TRANSITION TO STRAIGHT OR CURVED-END STRUCTURE

Sheet 2 of 3

DETAIL APPROVED FOR USE

APPROVED : MAY 2011

DETAIL E617-68

01-Jun-2011 09:30 AM 9:30:24 AM M:\Standards\EFLHD_Detail-Drawings\V8 draft_do not use\ERIC'S CADD WORK\EFL_DET_wVERDANA\s6\t68_detail.dgn

REG	STATE	PROJECT	SHEET NO.

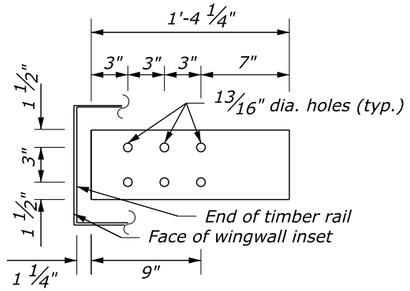

TERMINAL SECTION 6"x 3/8"x1'-4 1/4"

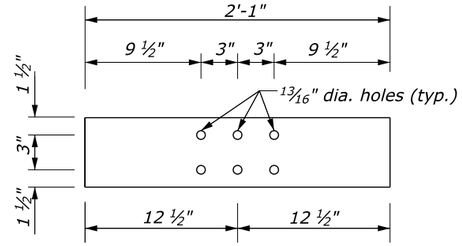

TERMINAL SECTION 6"x 3/8"x2'- 1 "

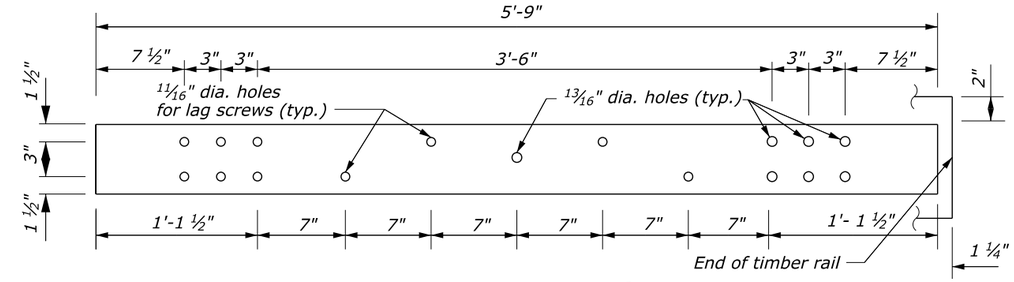

TERMINAL SECTION 6" x 3/8" x 5'- 9"

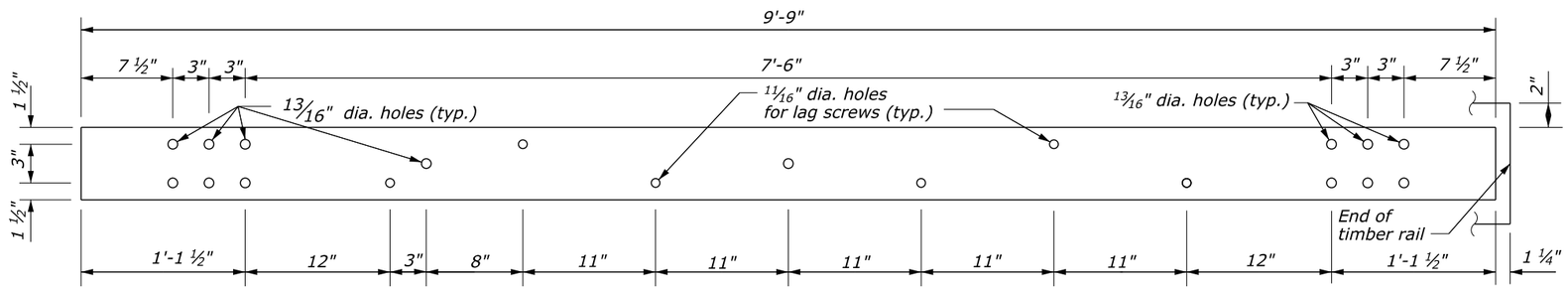

TRANSITION SECTION 6" x 3/8" x 9'-9"

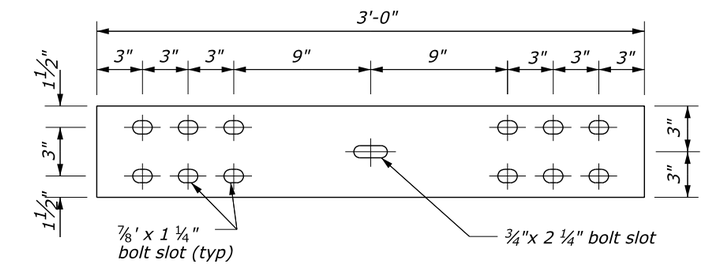

STEEL SPLICE PLATE 6"x 3/8" x3'-0"

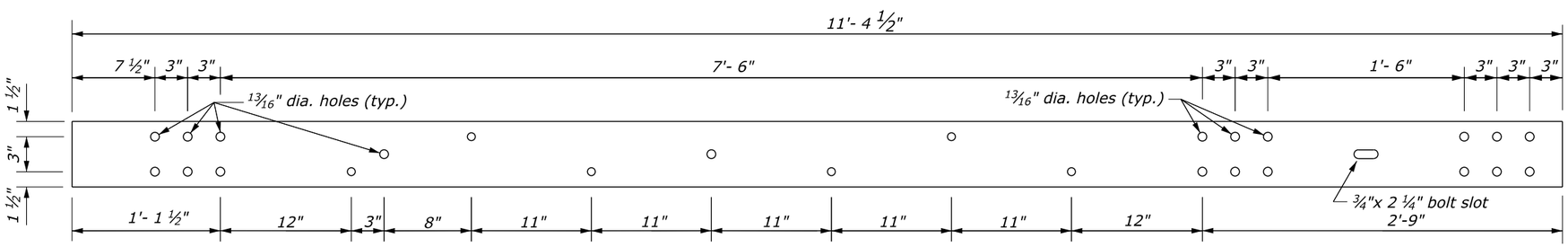

TRANSITION SECTION 6" x 3/8" x 11'-4 1/2"

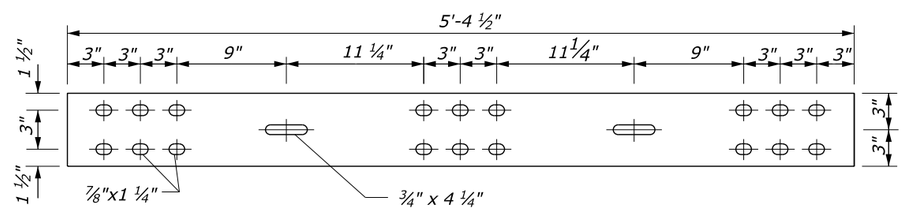

STEEL SPLICE PLATE 6" x 3/8" x 5'-4 1/2"

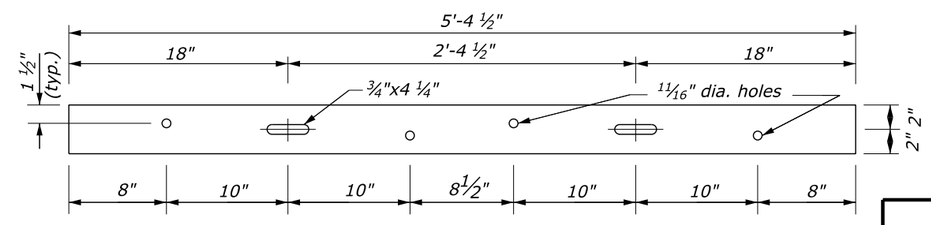

TERMINAL SECTION (rubrail) 4"x 3/8"x5'-4 1/2"

NO SCALE

U.S. DEPARTMENT OF TRANSPORTATION
FEDERAL HIGHWAY ADMINISTRATION
EASTERN FEDERAL LANDS HIGHWAY DIVISION

U.S. CUSTOMARY DETAIL

STEEL-BACKED TIMBER GUARDRAIL TEST LEVEL 2 TRANSITION TO STRAIGHT OR CURVED-END STRUCTURE

Sheet 3 of 3

DETAIL APPROVED FOR USE

APPROVED : MAY 2011

DETAIL E617-68

BKR 3/11/02

01-Jun-2011 09:31 AM 9:31:09 AM M:\Standards\EFLHD_Detail-Drawings\V8 draft_do not use\ERIC'S CADD WORK\EFL_DET_wVERDANA\s16l768_detail.dgn