REG	STATE	PROJECT	SHEET NO.

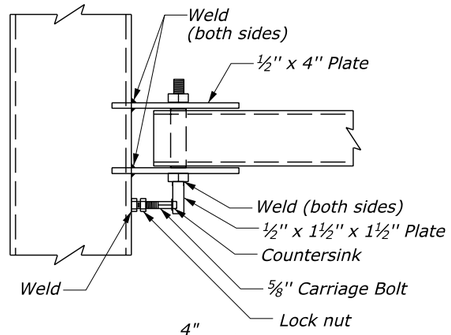

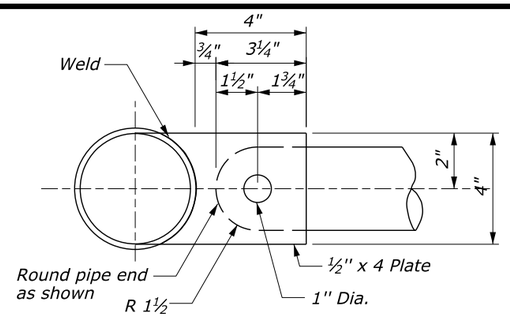

SECTION A-A

(TOP HANGER)

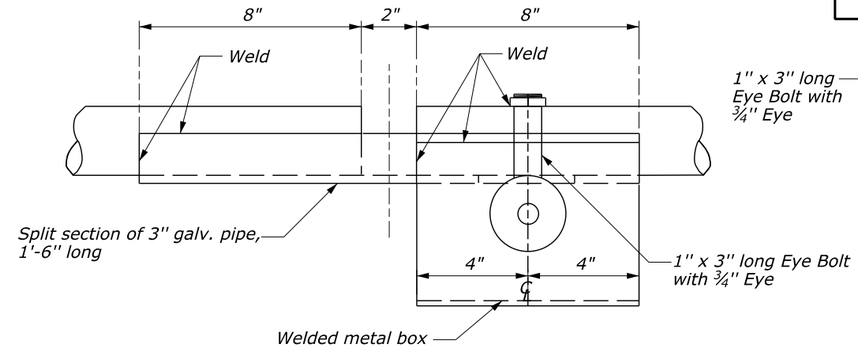

VIEW B-B

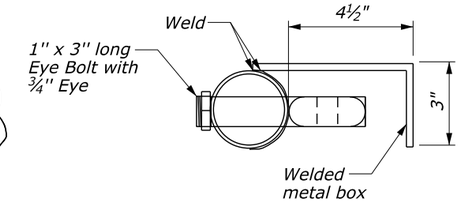

SECTION C-C

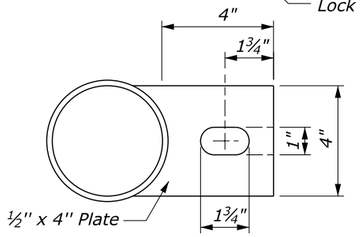

DETAIL "D"

(BOTTOM HANGER)

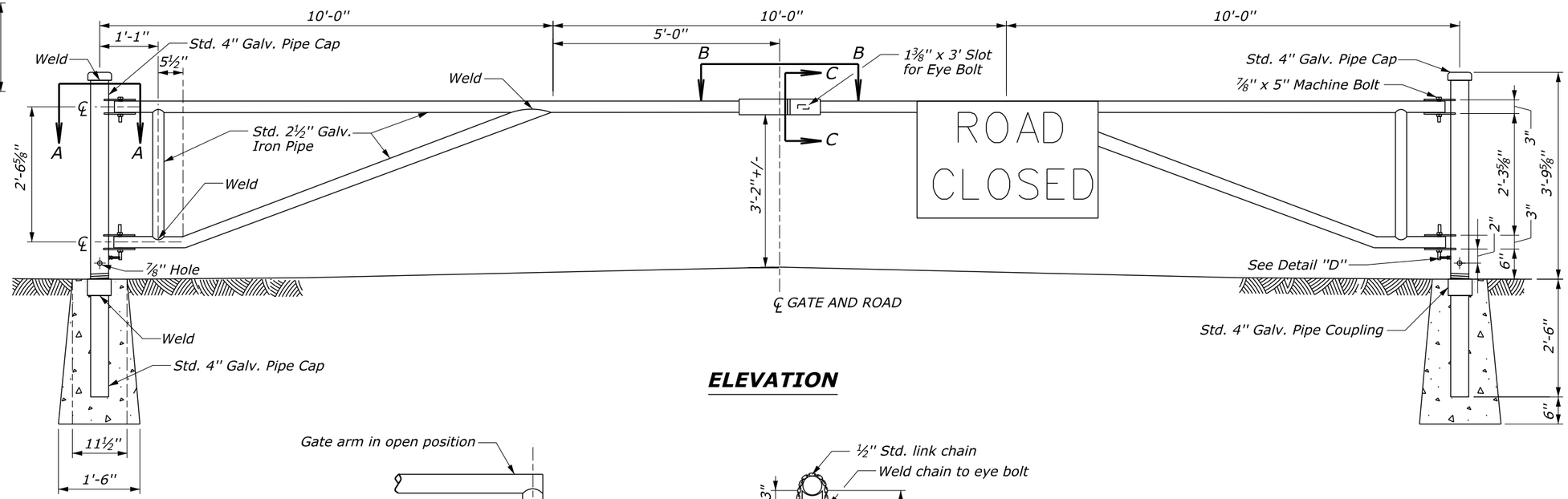

ELEVATION

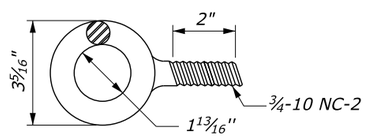

STD. EYE BOLT DETAIL

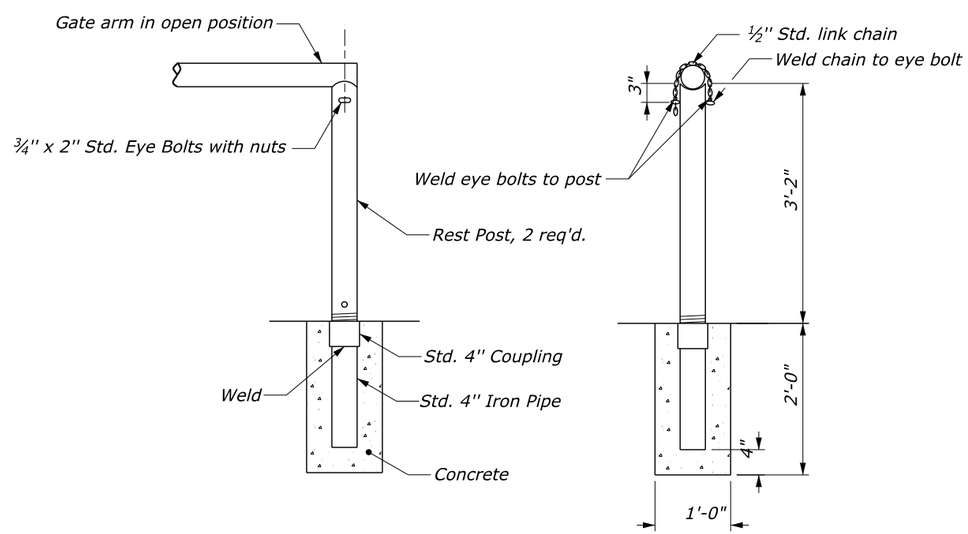

REST POST DETAIL

NOTES:

1. Close top end of Rest Posts with 4½" dia. x ⅛" thick steel plate, form to fit and weld in place.
2. Gates and posts to be painted either alternating black and reflectorized white 4-inch stripes at 45° or use galvanized metal parts, as directed by CO.
3. Mount one "Road closed" sign on gates as shown. Center the sign over the lane carrying the incoming traffic.

U.S. DEPARTMENT OF TRANSPORTATION
FEDERAL HIGHWAY ADMINISTRATION
EASTERN FEDERAL LANDS HIGHWAY DIVISION

U.S. CUSTOMARY DETAIL

METAL GATE 30 FT

DETAIL APPROVED FOR USE

APPROVED : MAY 2011

DETAIL E619-06

01-Jun-2011 10:15 AM M:\Standards\EFLHD_Detail-Drawings\V8 draft_do not use\ERIC'S CADD WORK\EFL_DET_wVERDANA\619906_detail.dgn 10:15:37 AM