| REG | STATE | PROJECT | SHEET NO. |
|---|---|---|---|
| | | | |

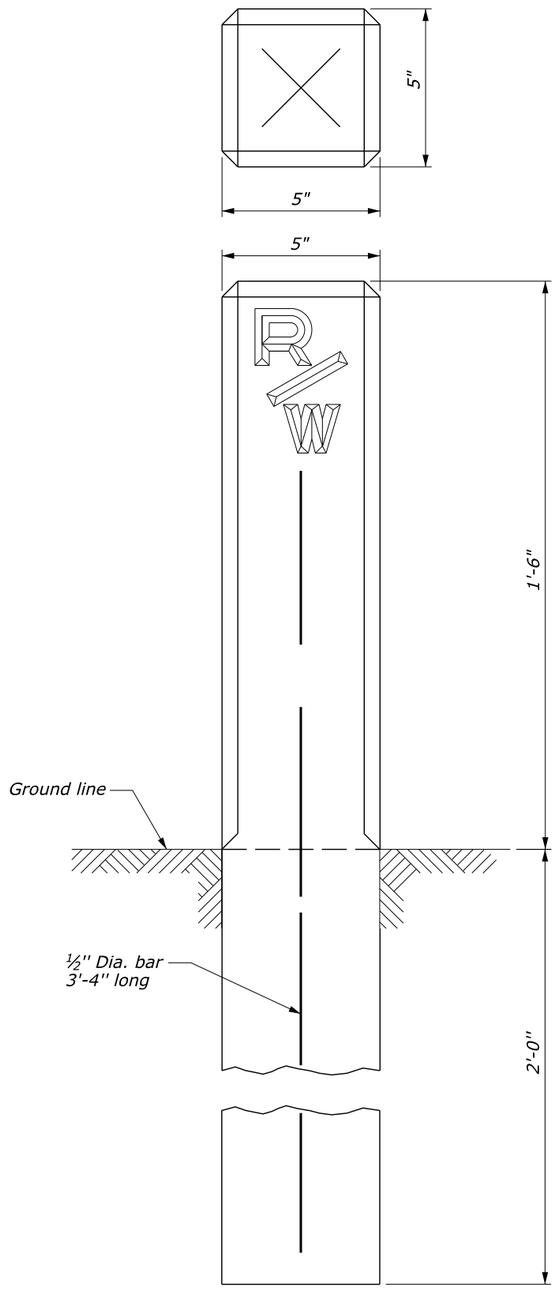


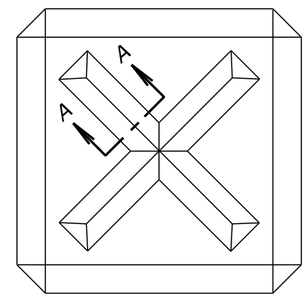


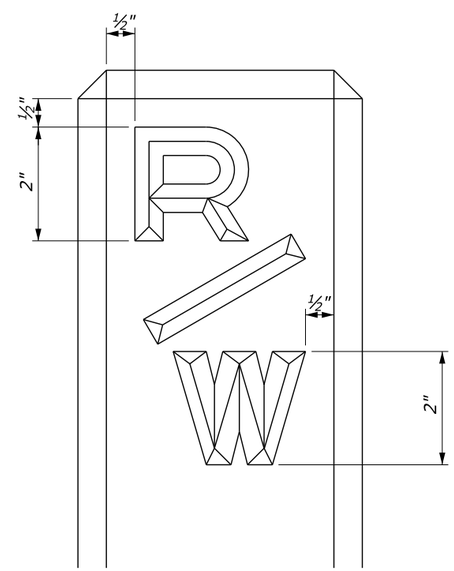


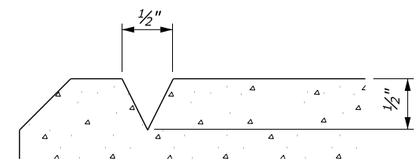


**SECTION A-A**

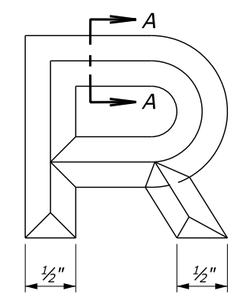


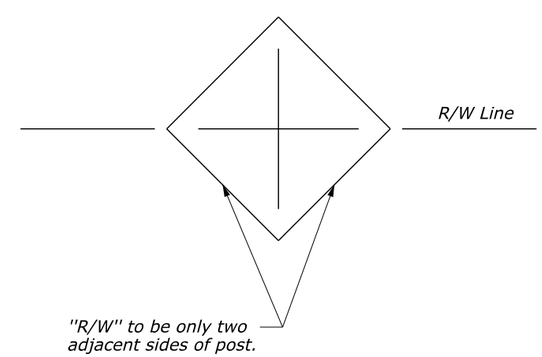


*NOTE:*

*In entrances and yards where the monuments would be unsightly, they may be set with the top flush with the ground.*

U.S. DEPARTMENT OF TRANSPORTATION
FEDERAL HIGHWAY ADMINISTRATION
EASTERN FEDERAL LANDS HIGHWAY DIVISION

U.S. CUSTOMARY DETAIL

# RIGHT-OF-WAY MARKER

DETAIL APPROVED FOR USE

APPROVED : MAY 2011

DETAIL
E621-01

01-Jun-2011 10:32 AM 10:32:23 AM M:\Standards\EFLHD_Details\Drawings\V8 draft_do not use\ERIC'S CADD WORK\EFL_DET_wVERDANA\sf6210i_detail.dgn