REG	STATE	PROJECT	SHEET NO.

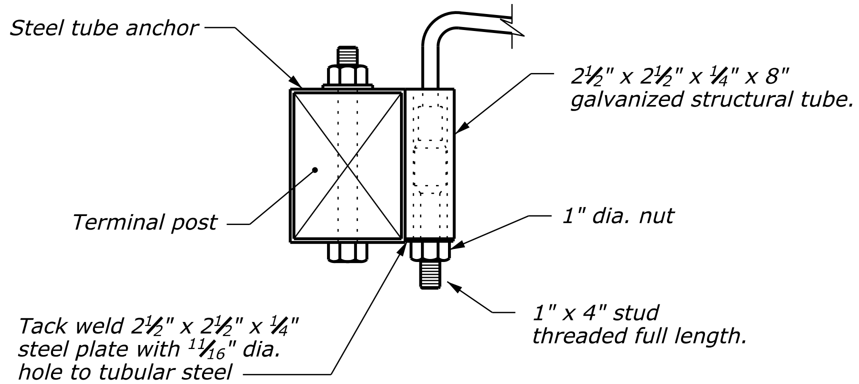

DETAIL A

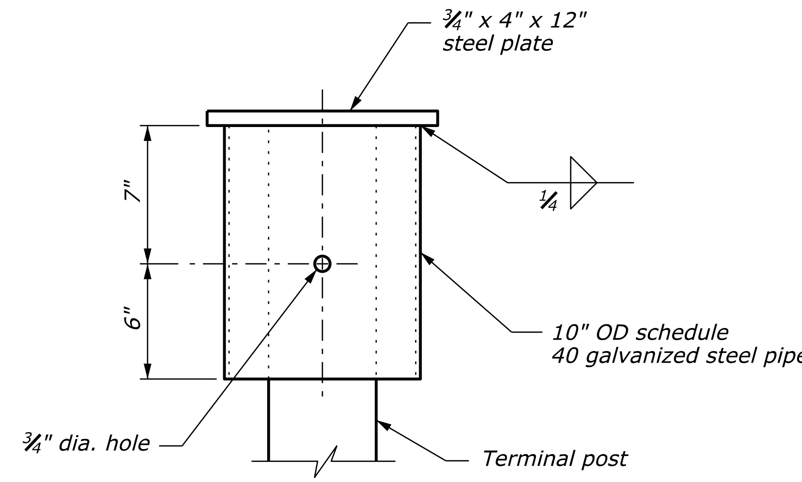

DETAIL B

NOTE:

1. See Detail ET 617-15 for other details.
2. Dimensional tolerances not shown or implied are intended to be those consistent with the proper functioning of the part, including its appearance, and accepted manufacturing practices.

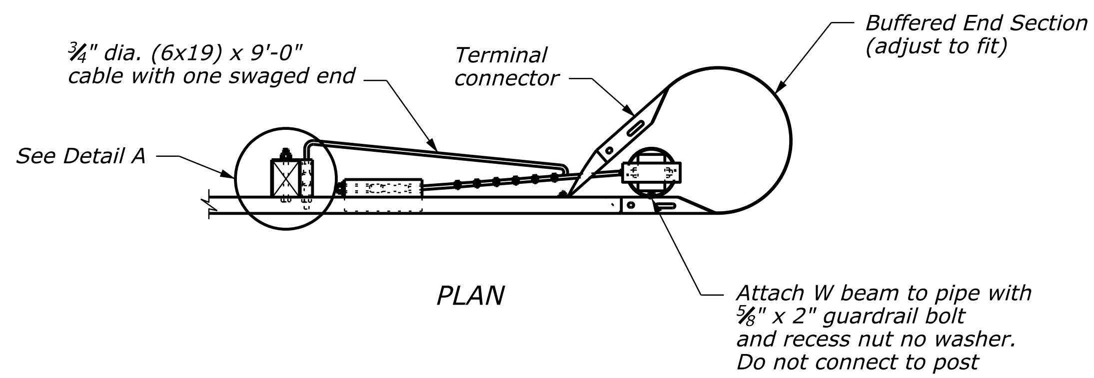

PLAN

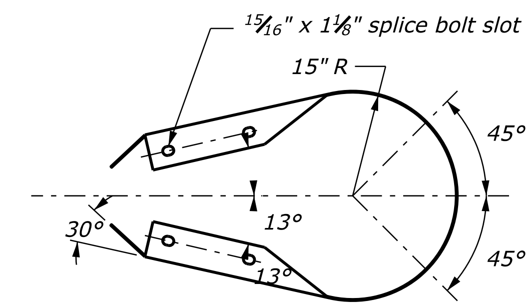

PLAN

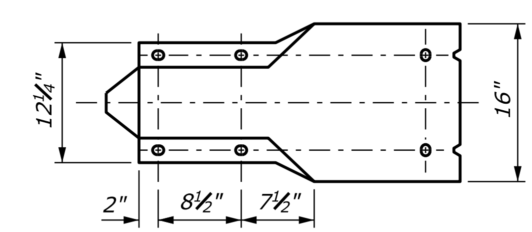

ELEVATION

BUFFERED END SECTION

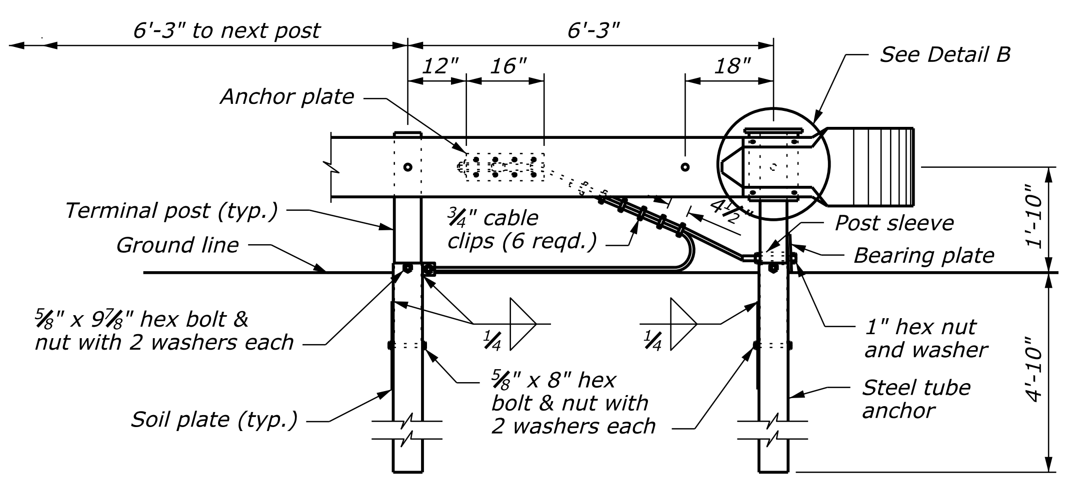

ELEVATION

ANCHORAGE ASSEMBLY

NO SCALE

U.S. DEPARTMENT OF TRANSPORTATION
FEDERAL HIGHWAY ADMINISTRATION
EASTERN FEDERAL LANDS HIGHWAY DIVISION

U.S. CUSTOMARY DETAIL

CRG W-BEAM GUARDRAIL CABLE RELEASING TERMINAL TYPE CRT, WOOD POSTS

STANDARD APPROVED FOR USE 1/1994

REVISED: 4/1994 6/2005

DETAIL
ET 617-22

$$$$DATE$$$$ $TIME$ $$$$DGN$$$