REG	STATE	PROJECT	SHEET NO.

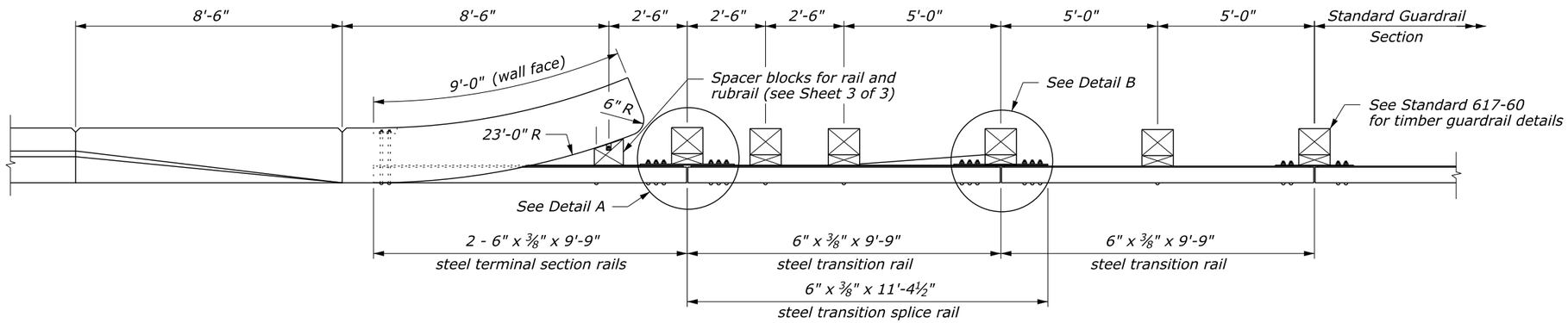

PLAN

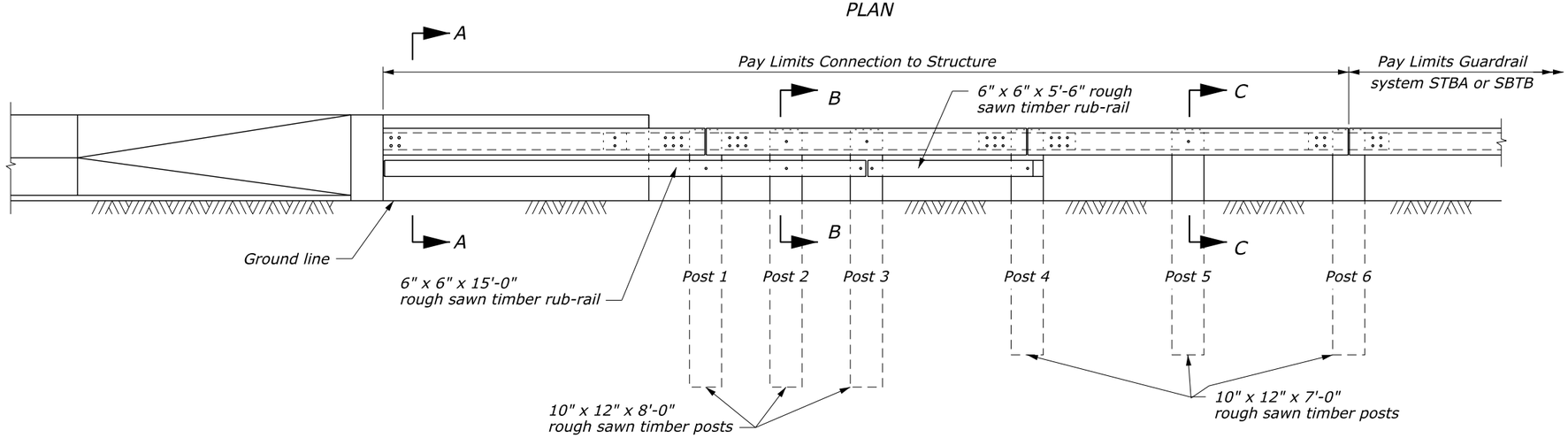

ELEVATION

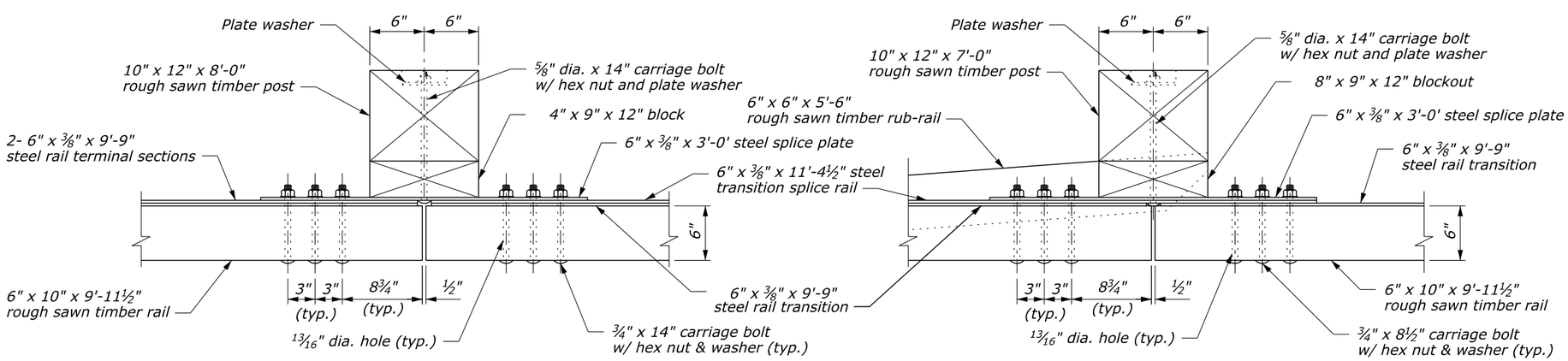

DETAIL A

DETAIL B

POST CONNECTION

NO SCALE

NOTE:

1. See the following sheets for Sections A-A through C-C, steel rail layouts, and other details.
2. Use weathering steel for all structural steel and fastener hardware.

U.S. DEPARTMENT OF TRANSPORTATION
FEDERAL HIGHWAY ADMINISTRATION
EASTERN FEDERAL LANDS HIGHWAY DIVISION

U.S. CUSTOMARY DETAIL

STEEL-BACKED TIMBER GUARDRAIL CONNECTION TO CURVED BACK STRUCTURE

Sheet 1 of 3

STANDARD APPROVED FOR USE 1/1994

REVISED: 4/1994

DETAIL ET 617-66

01-Jun-2011 09:19:57 AM M:\Standard\EFLHD_Detail-Drawings\V8 draft_do not use\ERIC'S CADD WORK\EFL_DET_wVERDANA\st61766_EFL_TEMP.dgn

REG	STATE	PROJECT	SHEET NO.

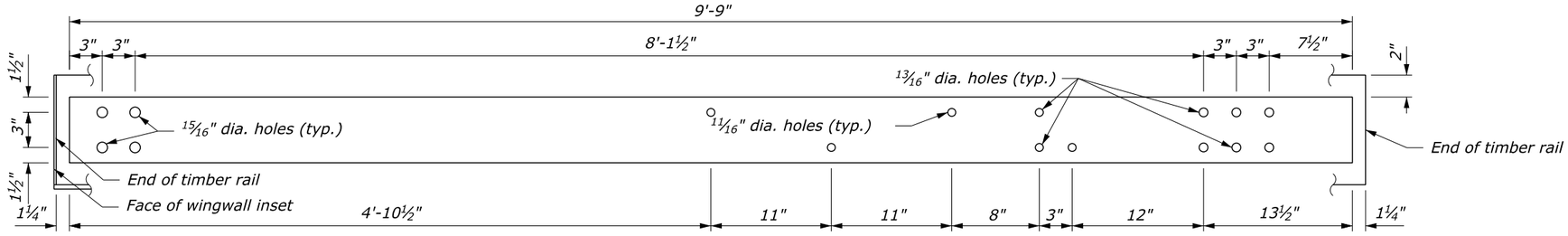

TERMINAL SECTION RAIL
6" x ⅜" x 9'-9"

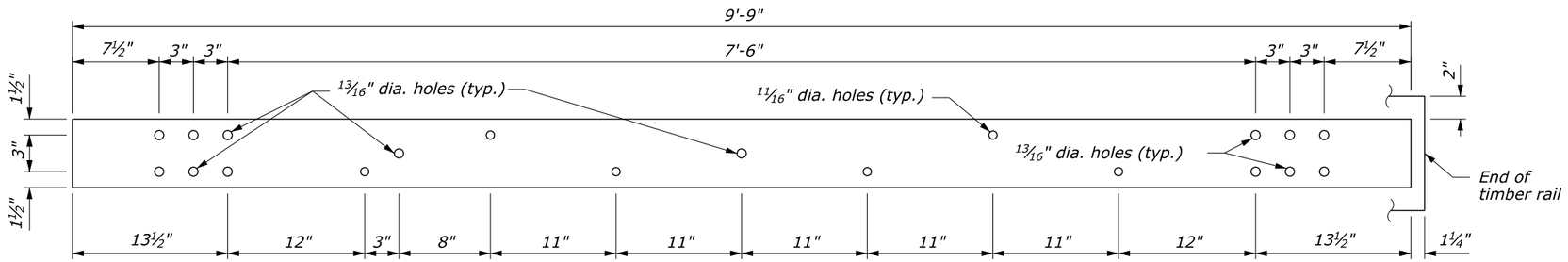

TRANSITION RAIL
6" x ⅜" x 9'-9"

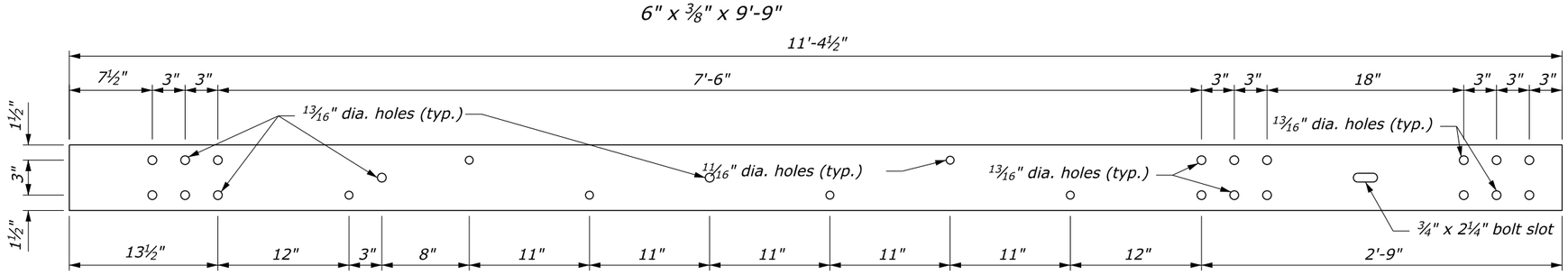

TRANSITION SPLICE RAIL
6" x ⅜" x 11'-4½"

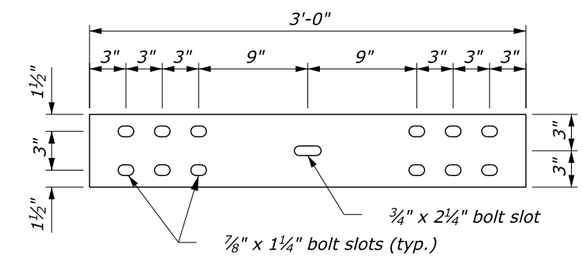

SPLICE PLATE
6" x ⅜" x 3'-0"

NOTE:

1. Pre-drill ⅝-inch holes in timber rail and ⅜-inch holes in the wood spacer block for the ⅝-inch lag screws.

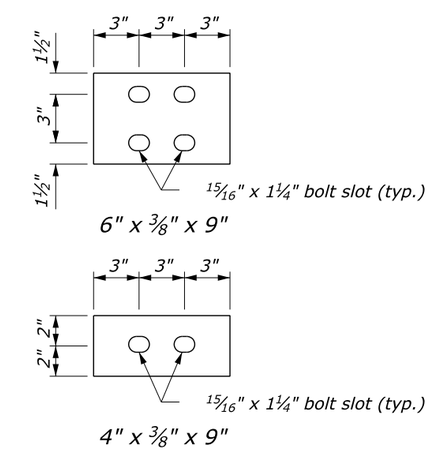

BEARING PLATE DETAILS

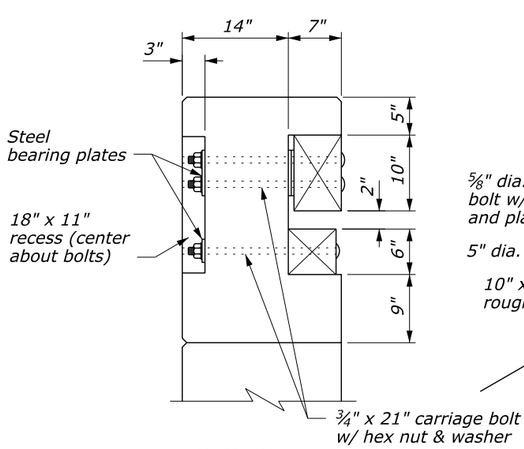

SECTION A-A

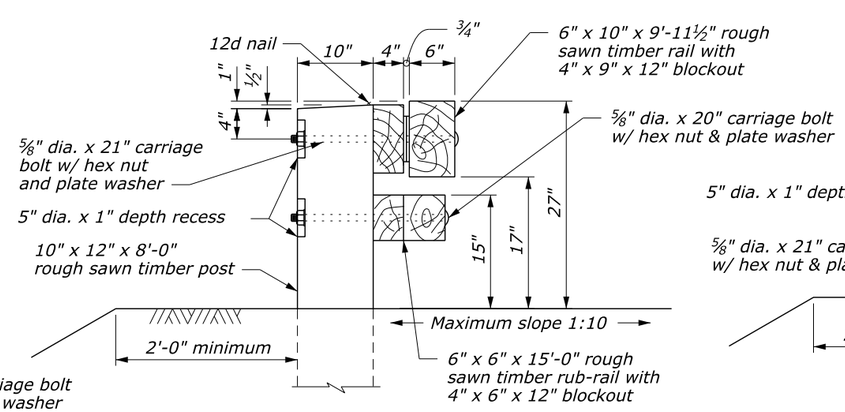

SECTION B-B

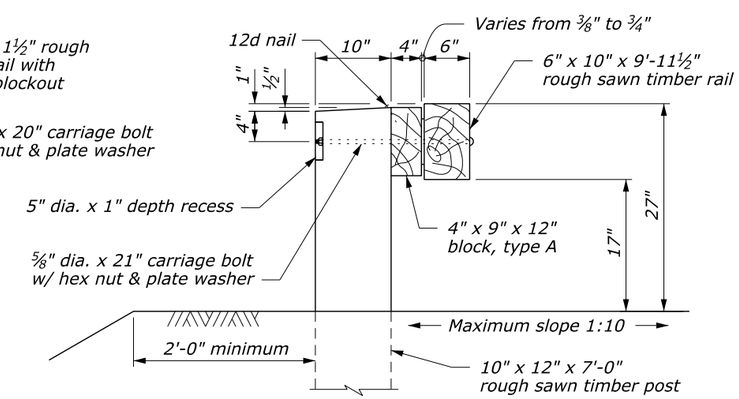

SECTION C-C

NO SCALE

U.S. DEPARTMENT OF TRANSPORTATION
FEDERAL HIGHWAY ADMINISTRATION
EASTERN FEDERAL LANDS HIGHWAY DIVISION

U.S. CUSTOMARY DETAIL

STEEL-BACKED TIMBER GUARDRAIL CONNECTION TO CURVED BACK STRUCTURE

Sheet 2 of 3

STANDARD APPROVED FOR USE 1/1994

REVISED: 4/1994

DETAIL ET 617-66

01-Jun-2011 09:19:43 AM M:\Standard\EFLHD_Detail-Drawings\V8 draft_do not use\ERIC'S CADD WORK\EFL_DET_wVERDANA\st61766_EFL_TEMP.dgn

REG	STATE	PROJECT	SHEET NO.

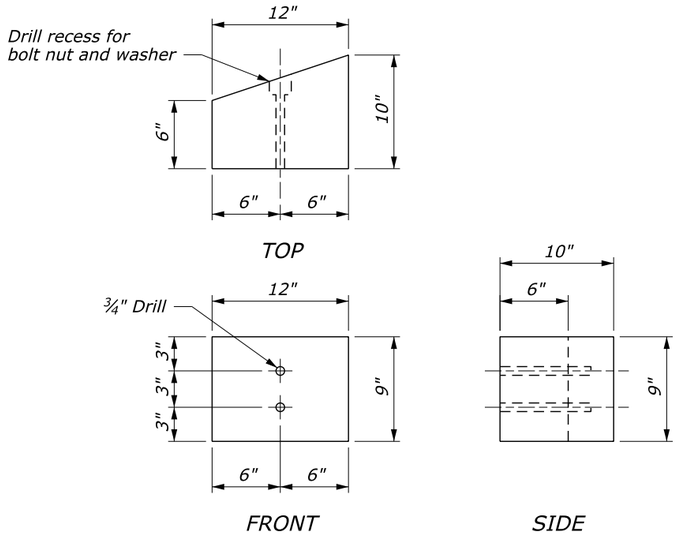

SPACER BLOCK FOR RAIL

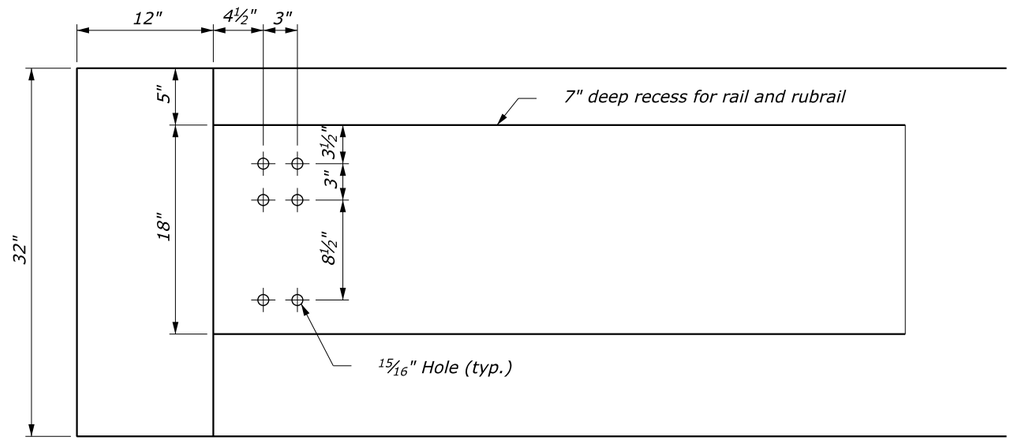

PARAPET ATTACHMENT DETAIL

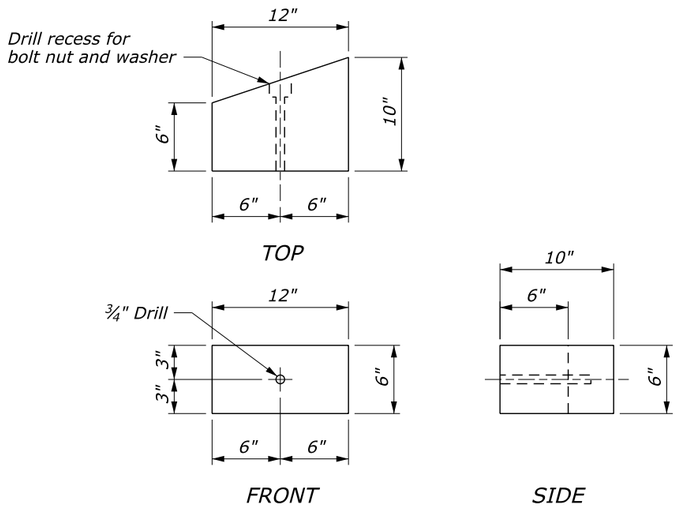

SPACER BLOCK FOR RUB-RAIL

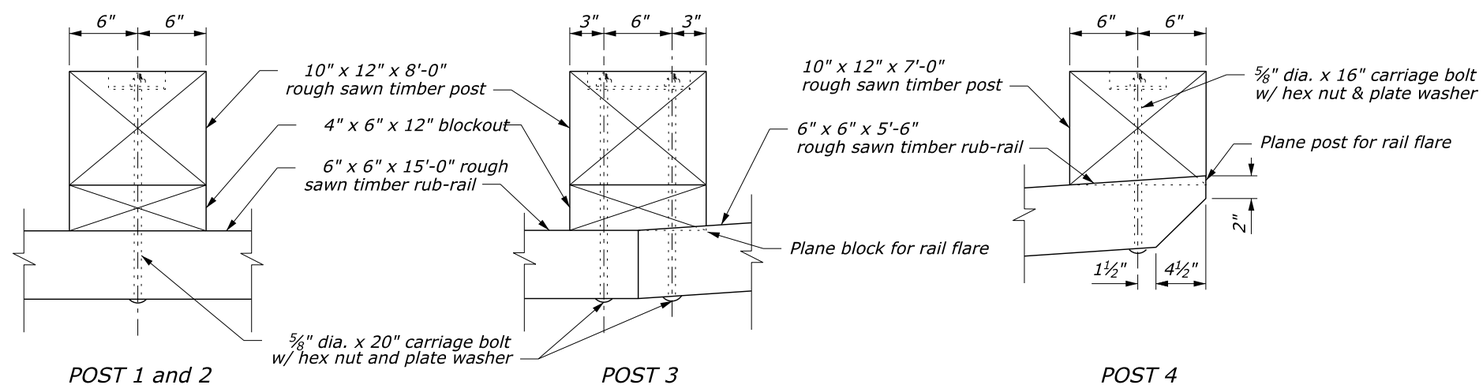

RUB-RAIL CONNECTIONS

NO SCALE

U.S. DEPARTMENT OF TRANSPORTATION
FEDERAL HIGHWAY ADMINISTRATION
EASTERN FEDERAL LANDS HIGHWAY DIVISION

U.S. CUSTOMARY DETAIL

STEEL-BACKED TIMBER GUARDRAIL CONNECTION TO CURVED BACK STRUCTURE

Sheet 3 of 3

STANDARD APPROVED FOR USE 1/1994

REVISED: 4/1994

DETAIL
ET 617-66

01-Jun-2011 09:19:16 AM N:\Standard\EFLHD_Detail-Drawings\V8 draft_do not use\ERIC'S CADD WORK\EFL_DET_wVERDANA\st61766_EFL_TEMP.dgn