REG	STATE	PROJECT	SHEET NO.

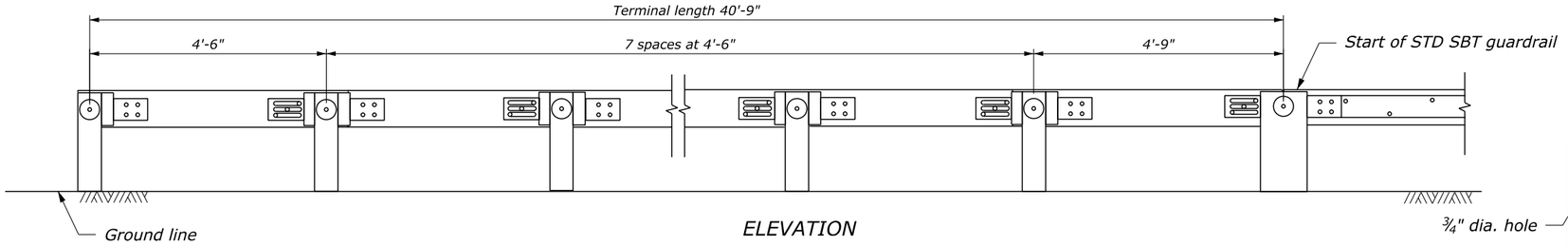

ELEVATION

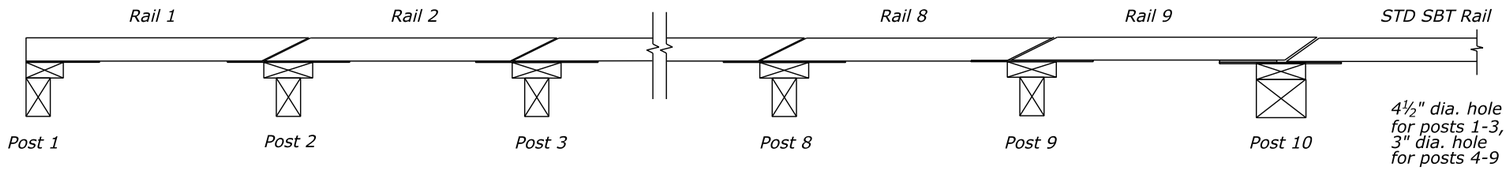

PLAN

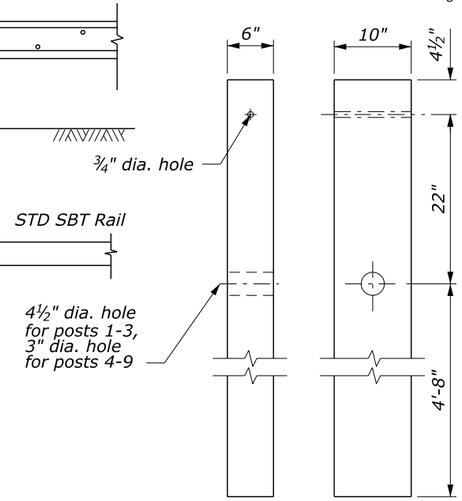

TIMBER POSTS 1 - 9
DETAIL I

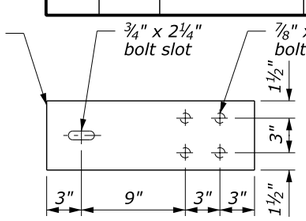

SPLICE PLATE AT POST 1
DETAIL K

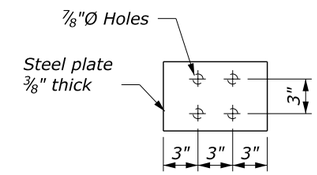

FILLER PLATE AT POST 10
DETAIL J

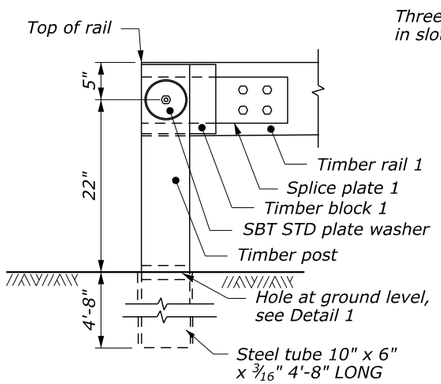

ELEVATION

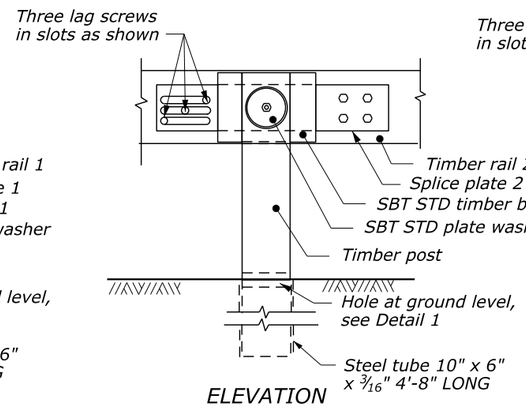

ELEVATION

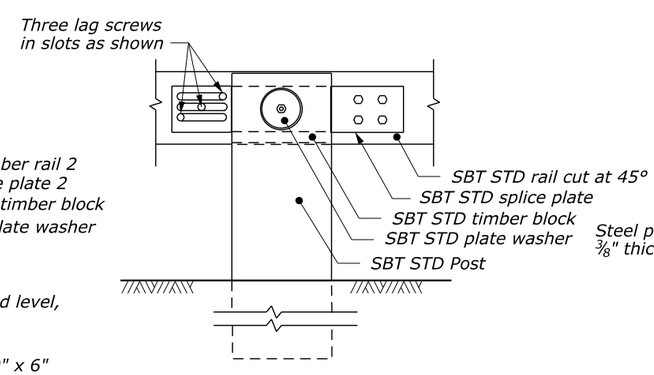

ELEVATION

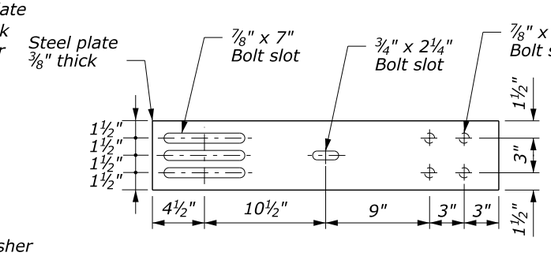

SPLICE PLATE AT POSTS 2 - 9
DETAIL G

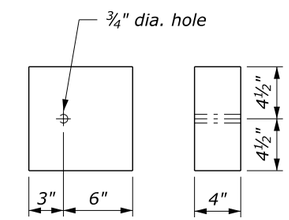

TIMBER BLOCK AT POST 1
DETAIL H

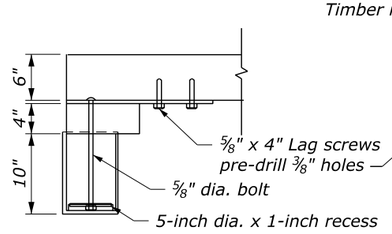

PLAN

POST/RAIL CONNECTION AT POST 1
DETAIL A

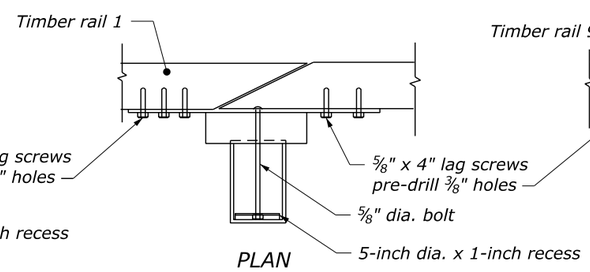

PLAN

POST/RAIL CONNECTION AT POSTS 2-9
DETAIL B

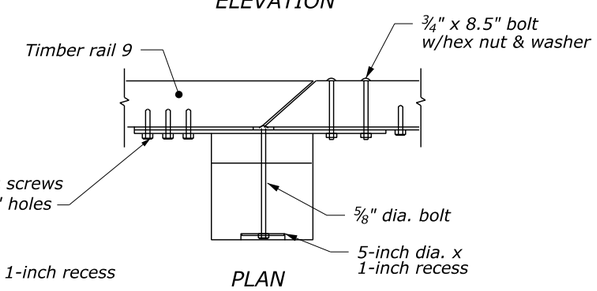

PLAN

POST/RAIL CONNECTION AT POST 10
DETAIL C

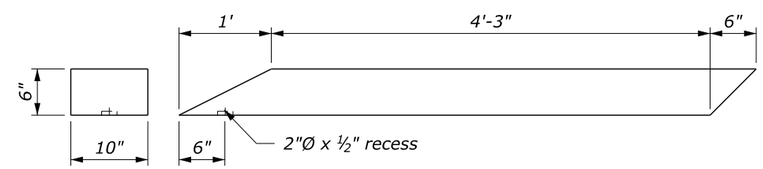

TIMBER RAILS 9
DETAIL F

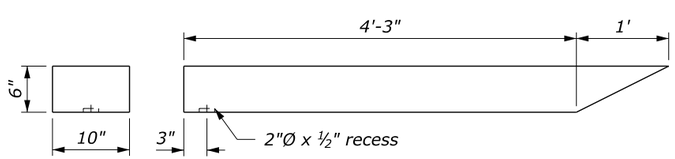

TIMBER RAIL 1
DETAIL D

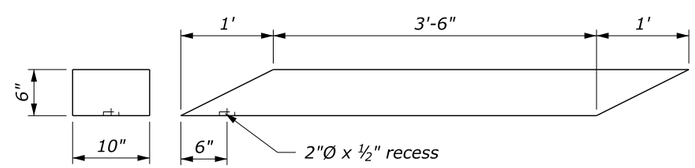

TIMBER RAILS 2 - 8
DETAIL E

NO SCALE

U.S. DEPARTMENT OF TRANSPORTATION
FEDERAL HIGHWAY ADMINISTRATION
EASTERN FEDERAL LANDS HIGHWAY DIVISION

U.S. CUSTOMARY DETAIL

TL-2 END TERMINAL FOR STEEL-BACKED TIMBER GUARDRAIL

DETAIL APPROVED FOR USE
APPROVED: MAY 2011

DETAIL
ET 617-69

M:\Standard\EFLHD_Detail-Drawings\V8 draft_do not use\ERIC'S CADD WORK\EFL_DET_wVERDANA\st61769_EFL_TEMP.dgn [USC]
31 May 2011 2:54 PM