REG	STATE	PROJECT	SHEET NO.

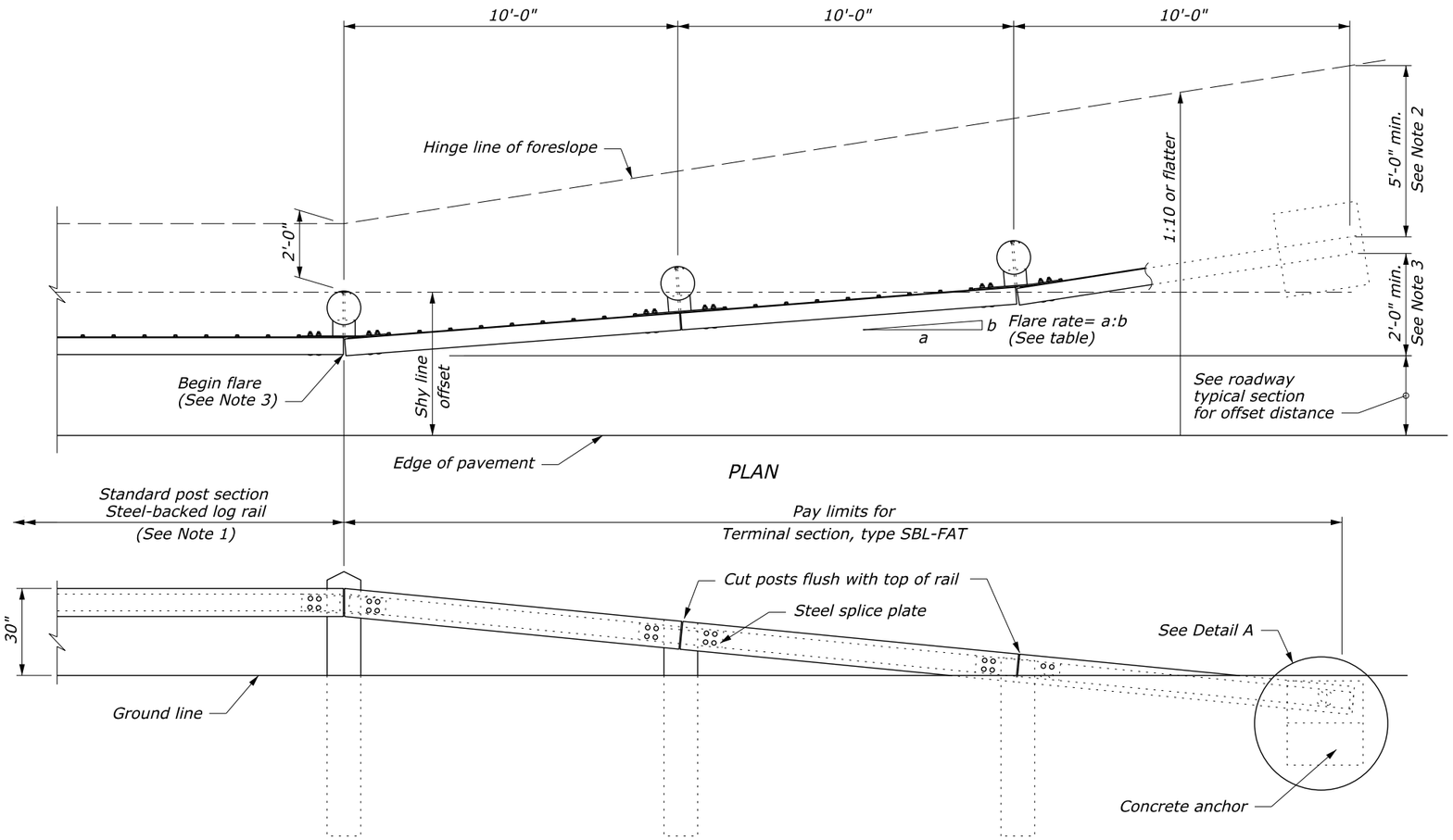

APPROACH & DEPARTURE FLARE WITH FLARED ANCHOR TERMINAL (FAT)

NOTE:

1. See Standard 617-80 and Detail ET 617-81, Steel-Backed Log Rail, for timber, structural steel, and hardware details.
2. Extend the fill widening a minimum of 5 feet behind the guardrail, unless otherwise directed by the CO.
3. The guardrail flare shown in the plan view is the minimum length and rate required. As directed by the CO, flare the guardrail so that the terminal section is outside the clear zone. If the terminal section cannot be located outside the clear zone, it should be flared as far as practical from the road at the maximum rate indicated on the Guardrail Flare Rates table.

GUARDRAIL FLARE RATE TABLE

Design Speed (mph)	Shy line offset (ft)	Flare rate inside shy line (a:b)	Flare rate outside shy line (a:b)
60	8.0	26:1	14:1
50	6.5	21:1	11:1
40	5.0	16:1	8:1
40 or less	3.5	13:1	7:1

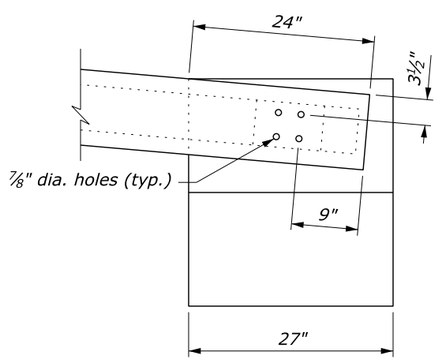

DETAIL A

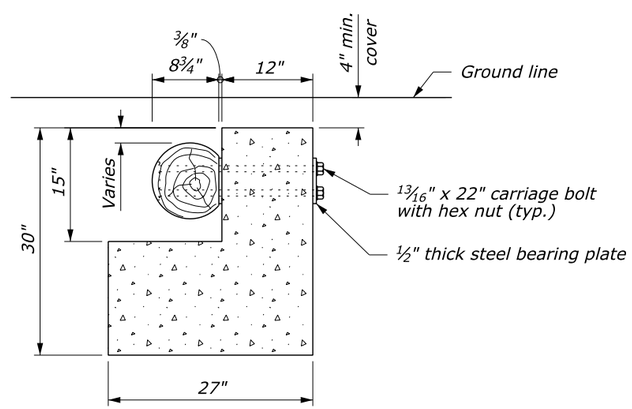

SECTION A-A

CONCRETE ANCHOR

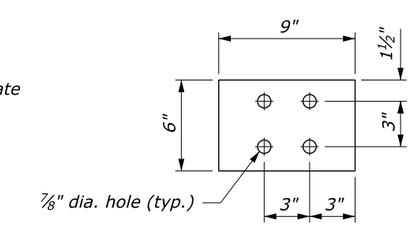

STEEL BEARING PLATE

NO SCALE

U.S. DEPARTMENT OF TRANSPORTATION
FEDERAL HIGHWAY ADMINISTRATION
EASTERN FEDERAL LANDS HIGHWAY DIVISION

U.S. CUSTOMARY DETAIL

STEEL-BACKED LOG RAIL TERMINAL SECTION, TYPE SBL-FAT

STANDARD APPROVED FOR USE 6/2005

REVISED:

DETAIL ET 617-82

01-Jun-2011 09:49:27 AM M:\Standard\EFLHD_Detail-Drawings\V8 draft_do not use\ERIC'S CADD WORK\EFL_DET_wVERDANA\st61782_EFL_TEMP.dgn