REG	STATE	PROJECT	SHEET NO.

CATTLE GUARD

REINFORCING STEEL, CONCRETE, STRUCTURAL STEEL, AND GRID UNIT TABLE OF QUANTITIES

DESCRIPTION	NOMINAL CATTLE GUARD WIDTH																																REMARKS
	12'		14'		16'		18'		20'		22'		24'		26'		28'		30'		32'		34'		36'		38'		40'		42'		
	QUAN.	LGTH.	QUAN.	LGTH.	QUAN.	LGTH.	QUAN.	LGTH.	QUAN.	LGTH.	QUAN.	LGTH.	QUAN.	LGTH.	QUAN.	LGTH.	QUAN.	LGTH.	QUAN.	LGTH.	QUAN.	LGTH.	QUAN.	LGTH.	QUAN.	LGTH.	QUAN.	LGTH.	QUAN.	LGTH.	QUAN.	LGTH.	
#4 Reinforcing bars, A1	8	92"	8	92"	8	92"	8	92"	8	92"	8	92"	8	92"	8	92"	8	92"	8	92"	8	92"	8	92"	8	92"	8	92"	8	92"	8	92"	
#4 Reinforcing bars, A2	20	86"	20	86"	20	86"	20	86"	20	86"	20	86"	20	86"	20	86"	20	86"	20	86"	20	86"	20	86"	20	86"	20	86"	20	86"	20	86"	See Bar Bending Detail
#4 Reinforcing bars, A3	32	108"	36	108"	40	108"	46	108"	50	108"	54	108"	60	108"	64	108"	70	108"	74	108"	80	108"	84	107"	90	108"	94	108"	98	108"	102	108"	See Bar Bending Detail
#4 Reinforcing bars, A4	10	156"	10	180"	10	204"	10	228"	10	252"	10	276"	10	300"	10	324"	10	348"	10	372"	100	396"	10	420"	10	444"	10	468"	10	492"	10	516"	
#4 Reinforcing bars, A5	8	140"	8	164"	8	188"	8	212"	8	236"	8	260"	8	284"	8	308"	8	332"	8	356"	8	380"	8	404"	8	428"	8	452"	8	476"	8	500"	
Grid unit A (6 ft)	2		1				3		2		1				3		2		5				3		6		1				7		See Grid Unit List of Materials
Grid unit B (8 ft)			1		2				1		2		3		1		2				4		2				4		5				See Grid Unit List of Materials
Concrete lateral supports, yd3	1.56		1.56		1.56		1.56		1.56		1.56		1.56		1.56		1.56		1.56		1.56		1.56		1.56		1.56		1.56		1.56		
Concrete end supports, yd3	4.03		4.70		5.37		6.04		6.71		7.38		8.05		8.73		9.40		10.07		10.74		11.41		12.08		12.75		13.42		14.10		
Total concrete, yd3	5.59		6.26		6.93		7.60		8.27		8.94		9.61		10.29		10.96		11.63		12.30		12.97		13.64		14.31		14.98		15.66		
*Structural steel, lb: W 8 x 18 beams	936		1053		1170		1404		1521		1638		1755		1989		2106		2340		2340		2574		2808		2808		2925		3276		Beams 18 lb/ft
*Structural steel, lb: Rail, ASCE 40	2052		2398		2744		3078		3424		3770		4116		4450		4796		5130		5488		5822		6156		6514		6860		7182		13.30 lb/ft
*Structural steel, lb: Rail, Type I	806		942		1078		1209		1345		1481		1617		1748		1884		2015		2156		2287		2418		2559		2695		2821		Approx. 5.22 lb/ft
*Structural steel, lb: Rail, Type II	1060		1238		1416		1590		1768		1946		2124		2298		2476		2650		2832		3006		3180		3362		3540		3710		6.86 lb/ft
*Structural steel, lb: Reinforcing steel, lb	478		526		574		634		683		731		791		839		899		947		1007		1055		1115		1164		1212		1260		0.668 lb/ft

* Structural steel weights do not include hardware or guard angle.

CATTLE GUARD WING

LIST OF MATERIALS PER WING
(TWO REQUIRED PER INSTALLATION)

PART DESCRIPTION	WOOD WING	ANGLE IRON WING	ALUMINUM TUBING WING
Outside diagonal supports	Two 2" x 6" x 84" treated S4S	Two 2" x 2" x ¼" x 87" galvanized steel angle	One 2" OD x ⅛" x 165" aluminum tubing
Middle support	One 2" x 6" x 72" treated S4S	One 2" x 2" x ¼" x 73" galvanized steel angle	
Horizontal brace no.1	One 2" x 6" x 66" treated S4S	One ½" x 78" galvanized steel bar	One 2" OD x ⅛" x 72" aluminum tubing
No. 2	One 2" x 6" x 48" treated S4S	One ½" x 66" galvanized steel bar	One 2" OD x ⅛" x 30" aluminum tubing
No. 3	One 2" x 6" x 18" treated S4S	One ½" x 54" galvanized steel bar	None
No. 4	None	One ½" x 39" galvanized steel bar	None
No. 5	None	One ½" x 24" galvanized steel bar	None
No. 6	None	One ½" x 9" galvanized steel bar	None
Post	6" x 6" x 96" treated S4S	One 6" x 6" x 84" treated S4S or approved alternate	One 6" x 6" x 96" treated S4S or approved alternate
Top anchor assembly	Toenail diagonal supports to the post with 16d galvanized nails as required.	⅜" dia. x 6" galvanized hex bolt w/nut and flat washer	¾" dia. x 16" galvanized steel rod threaded on one end w/nut and washers & 3" radius hook in other end.
Bottom anchor assembly	2" x 8" x 96" treated S4S sill attached to concrete w/3 each ½" dia. x 7" hex bolts w/nuts & washers embedded in concrete. Toenail diagonal supports to wooden sill w/16d galvanized nails.	3 each ⅜" dia. x 6" galvanized hex bolts embeded in concrete. Attach steel L iron to bolt w/flat washer and nut	2 each ¼" x 5" x 10" flat irons welded to 4" tubing. 4 each ¾" dia. x 6" galvanized hex bolts embedded in concrete. Attach the flat iron plates to the bolts with washer & nuts.

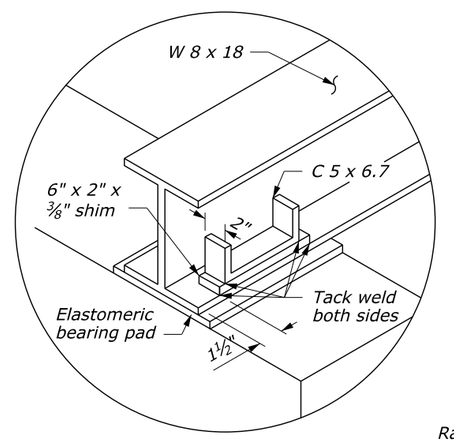

DETAIL A

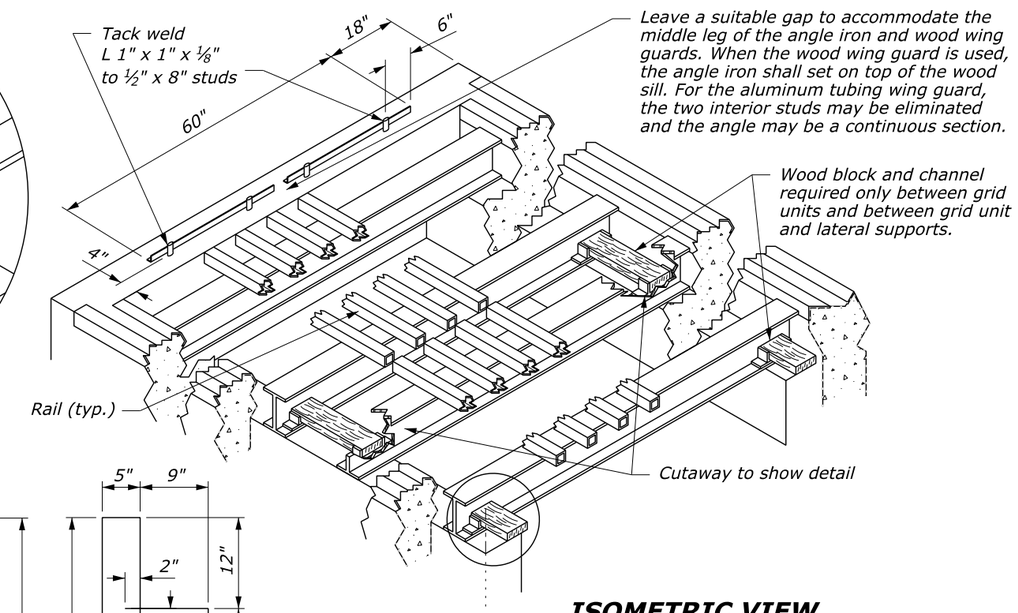

ISOMETRIC VIEW

GRID UNIT LIST OF MATERIALS

GRID UNIT TYPE A

4 each W 8 x 18 x 77" long 13 each ASCE 40 crane rail (with minimum spacing), or II tubular cross bar sections, (with minimum spacing), Type I or Type II, 71¼"

GRID UNIT TYPE B

5 each W 8 x 18 x 77" long 13 each ASCE 40 crane rail (with minimum spacing), or II tubular cross bar sections, (with minimum spacing), Type I or Type II, 95¼"

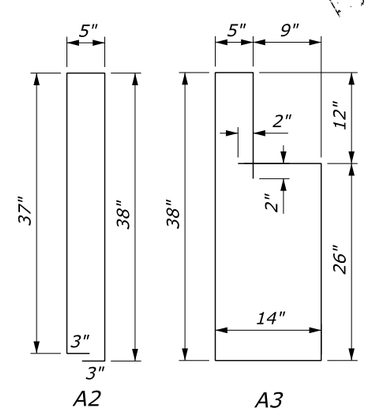

BAR BENDING DETAIL

NO SCALE

U.S. DEPARTMENT OF TRANSPORTATION
FEDERAL HIGHWAY ADMINISTRATION
EASTERN FEDERAL LANDS HIGHWAY DIVISION

U.S. CUSTOMARY DETAIL

CATTLE GUARD

STANDARD APPROVED FOR USE 6/2005

REVISED:

DETAIL ET 619-2

01-Jun-2011 10:08:06:11 AM:\Standard\EFLHD_Detail-Drawings\V8 draft_do not use\ERIC'S CADD WORK\EFL_DET_wVERDANA\st61902_EFL_TEMP.dgn