REG	STATE	PROJECT	SHEET NO.

LENGTH AND SPACING TABLE

APPROACH SPEED* MPH	BUFFER SPACE LENGTH FEET	CHANNELIZING DEVICE SPACING IN FEET: TAPER AREA	BUFFER SPACE	WORK SPACE	CONCRETE BARRIER FLARE RATE
20	115	20	40	40	1:8
25	155	20	50	50	1:8
30	200	20	60	60	1:8
35	250	20	70	70	1:9
40	305	20	80	80	1:10
45	360	20	90	90	1:12
50	425	20	100	100	1:14
55	495	20	110	110	1:16
60	570	20	120	120	1:16
65	645	20	130	130	1:16
70	730	20	140	140	1:16

* Approach speed based on the regulatory posted speed, not the advisory speed.

NOTE:

1. Install signs and other devices for single lane closure according to Detail ET 635-6, 7, 8, or 9. Final location and spacing of signs and devices may be changed to fit field conditions as approved by the CO.
2. Place barrier according to the AASHTO Roadside Design Guide. Terminate barrier ends outside the clear zone or protect the ends of the barrier with a crash cushion. Include reflectors on barrier at 25' intervals.
3. For project specific minimum width, refer to Special Contract Requirements, Section 156.
4. Place channelizing devices at downstream taper during non-work hours or when access is not needed.
5. Do not allow equipment, materials, or vehicles to be parked or stored in the buffer space.
6. Reduce or eliminate drums and barrier in downstream taper if necessary to provide access to work space.

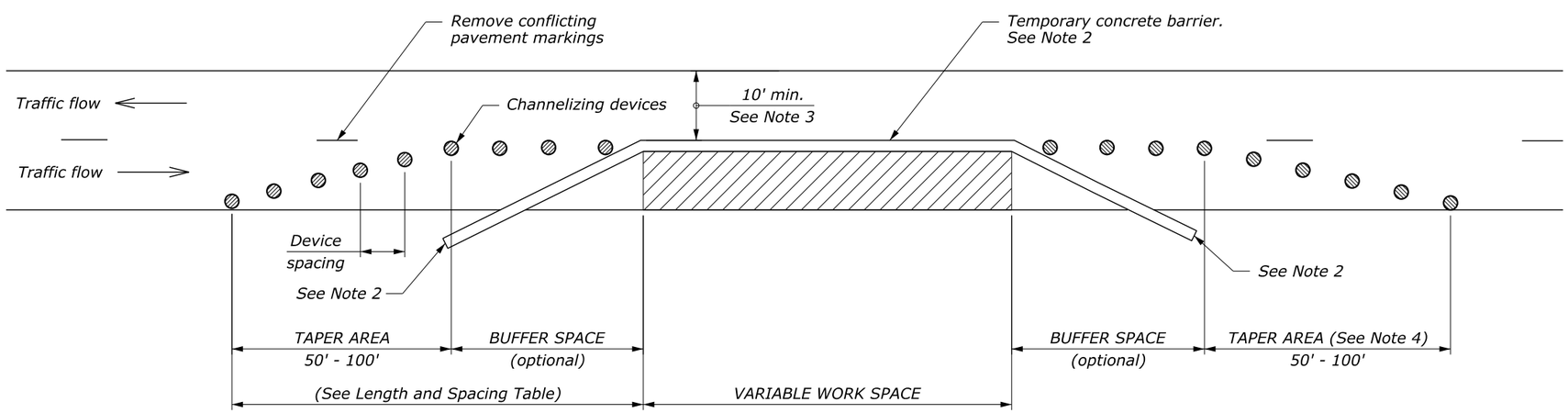

NO SCALE

U.S. DEPARTMENT OF TRANSPORTATION
FEDERAL HIGHWAY ADMINISTRATION
EASTERN FEDERAL LANDS HIGHWAY DIVISION

U.S. CUSTOMARY DETAIL

TEMPORARY TRAFFIC CONTROL SINGLE LANE CLOSURE LAYOUT (WITH TEMPORARY BARRIER)

STANDARD APPROVED FOR USE 6/2005

REVISED:

DETAIL ET 635-13

22 May 2011 4:03 PM M:\Standard\EFLHD_Detail-Drawings\V8 draft_do not use\ERIC'S CADD WORK\EFL_DET_wVERDANA\st63513_EFL_TEMP.dgn [USC]