REG	STATE	PROJECT	SHEET NO.

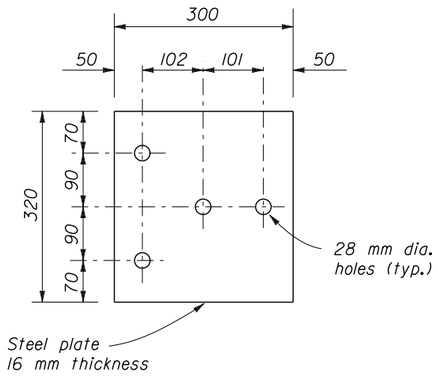

BEARING PLATE

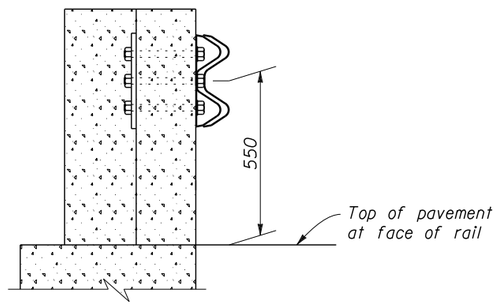

SECTION A-A

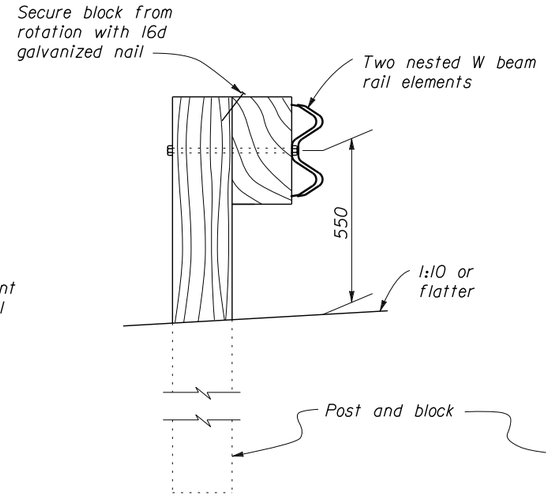

SECTION B-B

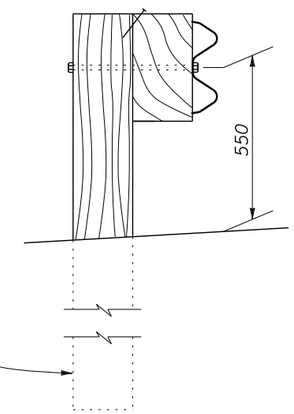

SECTION C-C

NOTE:

1. Dimensions not labeled are in millimeters.
2. Reinforced concrete wall or bridge parapet must be capable of developing a 265 kN pull out strength.
3. Connect steel spacer tube to rail element only.
4. Where reinforced concrete flare back transition section is required, See Detail MT 617-32 or plan sheets, as appropriate, for details.

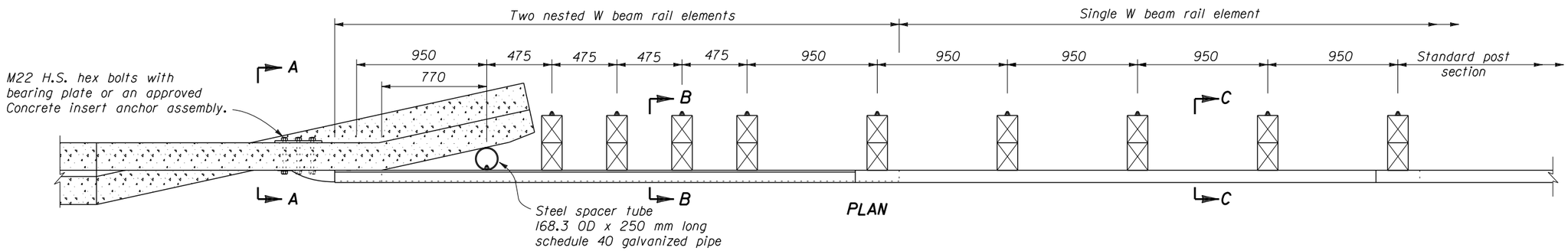

PLAN

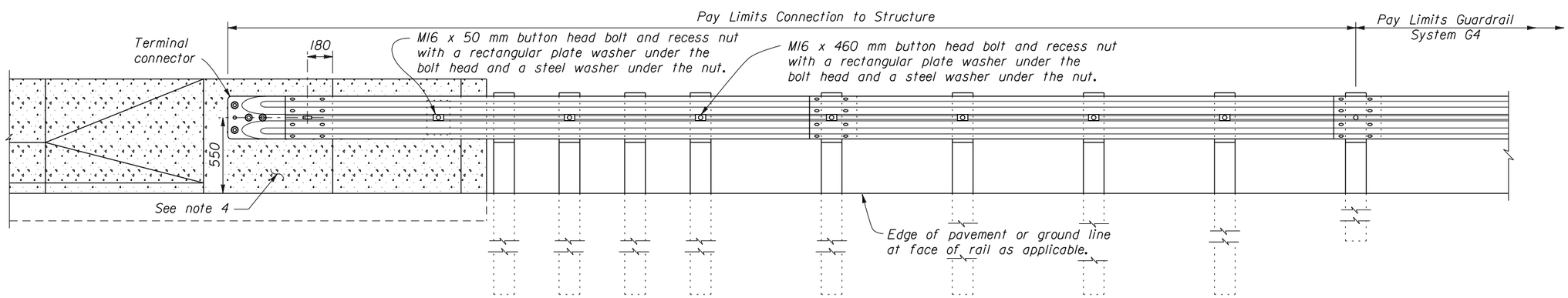

ELEVATION

NO SCALE

U.S. DEPARTMENT OF TRANSPORTATION
FEDERAL HIGHWAY ADMINISTRATION
EASTERN FEDERAL LANDS HIGHWAY DIVISION

METRIC DETAIL

G4 W BEAM GUARDRAIL CONNECTION TO STRUCTURE VERTICAL FLARED BACK WOOD POSTS

STANDARD APPROVED FOR USE 3/1996

REVISED:

DETAIL MT617-30

01-Jun-2011 09:02 AM M:\Standard\EFLHD_Detail-Drawings\V8 draft_do not use\ERIC'S CADD WORK\EFL_DET_wVERDANA\sf617 30_EFL_TEMP.dgn